C3T and corpuls3

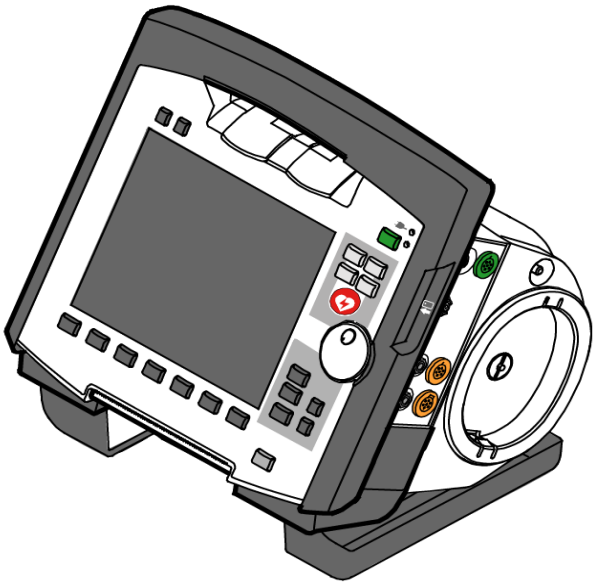

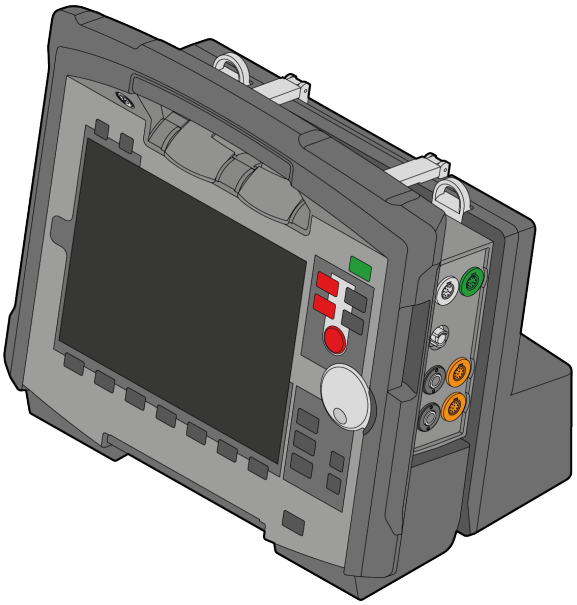

User manual

EN - Version 4.4.x.4 – P/N 04130.en

This user manual has been compiled to provide users with information necessary for safe and trouble-free operation, use on patients and maintenance of corpuls3 and corpuls3T. All persons dealing with use, maintenance and troubleshooting must read and implement this user manual.

If in this user manual the corpuls3 is mentioned, the information is valid for all functions and all product variants, unless indicated otherwise.

In addition to this user manual, the currently applicable ordinances and the generally accepted engineering principles as well as national regulations for occupational health and safety and accident prevention must be complied with.

GS Elektromedizinische Geräte
G. Stemple GmbH

Hauswiesenstrasse 26

86916 Kaufering

Germany

CE 0123

For a patient/user/third party in the European Union and in countries with identical regulatory regime (Regulation 2017/745/EU on Medical Devices); if, during the use of this device or as a result of its use, a serious incident has occurred, please report it to the manufacturer and/or its authorised representative and to your national authority.

All rights reserved, particularly rights of reproduction and distribution as well as translation.

Subject to technical modifications, mistakes and printing errors.

The rights to the trademarks and registered trademarks named remain with the originators and the holders of the respective trademark rights.

No part of the user manual may be reproduced, saved, processed, copied or circulated by means of electronic systems in any form whatsoever without the written agreement of GS Elektromedizinische Geräte G. Stemple GmbH.

Service address

In case of enquiries, please contact:

Address of the sales and service partner

Information on the authorised service and sales partners can also be found on the following website:

corpuls.world

Versions of the corpuls3 user manual

Issue	Date	User manual version	Version Software
25	2026-05	EN V4.4.x.4 – 04130.en	4.4.x
24	2026-04	EN V4.4.x.3 – 04130.en	4.4.x
23	2025-04	EN V4.4.x.1 – 04130.en	4.4.x
22	2024-09-24	ENG V4.4 – 04130.2	4.4.x
21	2023-01-20	ENG V4.3 – 04132.2 ENG V4.3 – 04130.2	4.3.0
20	2021-12-16	ENG V4.2 – 04132.2 ENG V4.2 – 04130.2	4.2.0
19	2021-09-08	ENG V4.1.1 – 04132.2 ENG V4.1.1 – 04130.2	4.1.1
18	2021-09-07	ENG V4.1 – 04130.2	4.1.0
17	2020-07-07	ENG V4.0 – 04130.2	4.0.0
16	02/2020	ENG V3.2 – 04130.2	3.2.0
15	02/2019	ENG V3.1 – 04130.2	3.1.0
14	07/2017	ENG V3.0 – 04130.2	3.0.3
13	02/2015	ENG V2.3 – 04130.2	2.3.2
12	05/2014	ENG V2.2 – 04130.2	2.2.2
11	06/2013	ENG V2.1 – 04130.2	2.1.0
10	07/2012	ENG V2.0 – 04130.2	2.0.0
9	10/2011	ENG V1.9 – 04130.2	1.9.0
8	07/2011	ENG V1.8 – 04130.2	1.8.0
7	11/2010	ENG V1.7 – 04130.2	1.7.0
6	12/2009	ENG V1.6 – 04130.2	1.6.0
5	07/2009	ENG V1.5 – 04130.2	1.5.0
4	07/2008	ENG V1.4 – 04130.2	1.4.1
3	11/2007	ENG V1.3 – 04130.2	1.3.0
2	08/2007	ENG V1.2 – 04130.2	1.2.0
1	06/2007	ENG V1.1 – 04130.2	1.1.0

Table 0-1 Versions of the User manual

Supplements to the corpuls3 user manual

Version	Date	Description	User manual version	Version Software
A	04/2010	Supplement of the alarm messages	DE V1.4 - 04130.1 DE V1.5 - 04130.1 DE V1.6 - 04130.1	1.4 1.5 1.6
A	05/2010	New defib keyboard	DE V1.7 - 04130.1	1.7.0
A	03/2011	Interval Measurement NIBP	DE V1.7 - 04130.1	1.7.2
A	07/2011	Night vision mode	DE V1.8 - 04130.1	1.8.0
A	03/2017	Supplement of the alarm messages	GER 2.3 - 04130.1	2.3.51
A	07/2017	Parameter Race, Recording of RTD tracks	GER 2.3 - 04130.1	2.3.61
A	2019-05-08	Printer intensity	GER 3.1 - 04130.1	3.0.5, 3.1.1
A	2019-11-15	Priorität DE-Ableitung	GER 3.1 - 04130.1	3.1.3
A	2021-01-13	Verbindungsstörung	GER 4.1 - 04130.1	4.0.3

Table 0-2 Supplements to the User manual

Compatibility of software versions

corpuls3 version	corpuls cpr version
as of 4.0.0	as of 1.2.0

Table 0-3 Compatibility



Warning

Delayed therapy due to incompatibility!

Compression-synchronised therapy can only be implemented in combination with a corpuls cpr, as a connection to other chest compression devices is not possible.

Table of Contents

1 Safety 1
1.1 General 1
1.2 Related Documents 1
1.3 Information Labels, Warning Labels and Symbols on the Device 1
1.4 Warnings 3
1.5 Special Types of Risk 3
1.6 Cybersecurity 3

2 Intended Purpose 5
2.1 Intended Purpose 5
2.2 Indications and Contraindications 5
2.3 Appropriate Use 6
2.4 Operating Staff/Intended Users 7
2.4.1 Restrictions of Use of Therapeutic Functions 7
2.4.2 Maintenance 7
2.5 Intended Patient Population 8

3 Introduction 9
3.1 Components 9
3.2 Device Design 10
3.2.1 Pairing (Connection Authorisation) 12
3.2.2 Monitoring unit 14
3.2.3 Patient Box and Accessory Bag 15
3.2.4 Defibrillator/pacer 18
3.2.5 Defibrillator/Pacer SLIM 19
3.2.6 Brackets 19
3.3 Description of the Monitoring, Diagnostic and Therapeutic Functions 20
3.3.1 Monitoring and Diagnostic Functions 20
3.3.2 Therapy functions 21
3.3.3 Clinical Benefit 24
3.3.4 Summary of Safety and Clinical Performance (SSCP) 26
3.3.5 Training Concept 26
3.4 Alarm Management 29
3.4.1 Alarm Signals at the Monitoring unit 30
3.4.2 Alarm Signals at the Patient box 32
3.5 Energy Management 33
3.5.1 Battery operation 33
3.5.2 Mains operation 34

4 General Operating Instructions 37

4.1 Operating- and screen elements ... 37
4.1.1 Operating Elements and LEDs on the Monitoring Unit ... 37
4.1.2 Basic Structure of the Screen Pages on the Monitoring Unit ... 40
4.1.3 Operation via Touchscreen (only corpuls3T) ... 43
4.1.4 Patient box screen ... 45
4.1.5 Control Keys and LEDs on the Patient Box ... 46
4.1.6 Control Key and LEDs on the Defibrillator/Pacer ... 47
4.1.7 Control Key and LEDs on the Defibrillator/Pacer SLIM ... 47
4.2 Switching On and Off ... 48
4.2.1 Switching on ... 48
4.2.2 Switching off ... 49
4.3 Menu Control ... 51
4.3.1 Softkey Context Menu ... 51
4.3.2 Parameter Context Menu and Curve Context Menu ... 52
4.3.3 Main Menu ... 53
4.3.4 Configuration dialogue ... 54
4.4 Disconnecting and Connecting Modules ... 54
4.4.1 Disconnecting the Monitoring Unit from the Defibrillator/Pacer ... 55
4.4.2 Disconnecting the Patient Box from the Monitoring Unit ... 55
4.4.3 Connecting the Patient Box to the Monitoring Unit ... 56
4.4.4 Connecting the Monitoring Unit to the Defibrillator/Pacer ... 57
4.4.5 Removing the Patient Box from the Compact Device ... 58
4.5 Accessory bag ... 59
4.5.1 Fitting the Accessory Bag ... 59
4.5.2 Packing the Accessory Bag ... 60
4.6 Inserting the Device into the Brackets ... 63
4.6.1 Defibrillator/Compact Device Bracket ... 63
4.6.2 Monitoring Unit Bracket ... 63
4.6.3 Charging bracket Patient box ... 64

5 Operation – Therapy ... 66

5.1 Therapy Electrodes for Defibrillation and Pacing ... 66
5.1.1 Types of Therapy Electrodes ... 66
5.1.2 Connecting the Electrode Cable ... 68
5.1.3 Removing the Shock Paddles from their Holders and Re-inserting them ... 69
5.2 Preparing the Patient for Defibrillation, Cardioversion and Pacer Therapy ... 70
5.3 Defibrillation in AED Mode ... 71
5.3.1 Information on the AED Mode ... 71
5.3.2 Defibrillation in AED mode with corPatch Electrodes ... 75
5.3.3 Defibrillation in AED Mode with Shock Paddles ... 76
5.4 Defibrillation in manual mode ... 78

5.4.1 Information on Manual Defibrillation and Cardioversion ... 78
5.4.2 Manual Defibrillation with corPatch Electrodes ... 81
5.4.3 Manual Defibrillation and Cardioversion with Shock Paddles ... 82
5.4.4 Manual Defibrillation and Cardioversion with Shock Spoons ... 83
5.4.5 Manual Defibrillation and Cardioversion of Neonates and Children ... 84
5.5 External Pacer ... 86
5.5.1 Information on the External Pacer ... 86
5.5.2 Preparing the pacer function ... 88
5.5.3 Starting the Pacer Function ... 90
5.6 Metronome ... 94
5.6.1 Information on the Metronome ... 94
5.6.2 Starting the Metronome ... 95
5.7 CPR feedback ... 96
5.7.1 Information on CPR Feedback (Devices up to 2022-06-11) ... 96
5.7.2 Preparing CPR Feedback (Devices up to 2022-06-11) ... 97
5.7.3 Working with CPR Feedback (Devices up to 2022-06-11) ... 98
5.7.4 corPatch CPR summary (Devices up to 2022-06-11) ... 99
5.7.5 Information on primeCPR Feedback ... 100
5.7.6 Preparing primeCPR Feedback ... 101
5.7.7 Working with CPR Feedback ... 101
5.7.8 primeCPR summary ... 103
5.7.9 preShock CPR ... 103
5.8 Display of corpuls cpr Parameters ... 104
5.9 Compression Synchronised Therapy with the corpuls cpr ... 104
5.9.1 Therapy Control of the corpuls cpr via the corpuls3 ... 105
5.9.2 Configuration of Therapy Parameters of the corpuls cpr ... 105
5.9.3 Compression Synchronised Therapy in AED mode ... 106
5.9.4 Compression Synchronised Therapy in Manual Mode ... 106

6 Operation – Monitoring and Diagnosis ... 107

6.1 Information on Monitoring and Diagnosis ... 107
6.2 Monitoring Trends ... 107
6.3 Monitoring ECG ... 108
6.3.1 Information on ECG Monitoring ... 108
6.3.2 Colour coding of ECG leads ... 109
6.3.3 Preparing ECG Monitoring ... 110
6.3.4 Performing ECG Monitoring ... 111
6.3.5 Adapting the Representation of the ECG Curve ... 112
6.3.6 Heart rate monitoring ... 114
6.4 Recording, Measuring, Printing and Interpreting a Diagnostic ECG ... 115
6.4.1 Information on Diagnostic ECG ... 115

6.4.2 Preparing the Patient for a D-ECG ... 116
6.4.3 Recording and Measuring a Diagnostic ECG ... 118
6.4.4 Representative Cycle ... 125
6.4.5 ECGmax (Option in Connection with corpuls.mission LIVE) ... 126
6.5 Longterm ECG ... 128
6.5.1 Information on Longterm ECG ... 128
6.5.2 Preparing Longterm ECG ... 128
6.5.3 Performing Longterm ECG ... 129
6.6 Oximetry Monitoring (Option) ... 130
6.6.1 Information on Oximetry Monitoring ... 130
6.6.2 Extended Oximetry Monitoring ... 131
6.6.3 Preparing Oximetry Monitoring ... 132
6.6.4 Performing Oximetry Measurement ... 133
6.6.5 Adjusting the Representation of the Oximetry Parameters ... 134
6.6.6 Monitoring Pulse Rate and Perfusion Index ... 135
6.6.7 Monitoring respiration rate (Pleth) ... 135
6.7 CO_2 Monitoring (option) ... 136
6.7.1 Information on CO2 Monitoring ... 136
6.7.2 Preparing CO2 Monitoring ... 137
6.7.3 Disposable Adapter for CO2 Endotracheal Tube incl. Insert for Neonates ... 139
6.7.4 Performing CO2 Measurement ... 139
6.7.5 Adjusting the Representation of the CO2 Values ... 141
6.7.6 Monitoring respiratory rate ... 141
6.8 Non-invasive Blood Pressure Monitoring (option) ... 142
6.8.1 Information on NIBP Monitoring ... 142
6.8.2 Preparing Blood Pressure Monitoring ... 145
6.8.3 Performing Individual Blood Pressure Measurement ... 147
6.8.4 Performing Blood Pressure Interval Monitoring ... 148
6.9 Invasive Blood Pressure Monitoring (IBP) (Option) ... 149
6.9.1 Information on IBP Monitoring ... 149
6.9.2 Preparing Invasive Blood Pressure Monitoring ... 149
6.9.3 Performing Invasive Blood Pressure Monitoring ... 150
6.10 Temperature Monitoring (Option) ... 152
6.10.1 Information on Temperature Monitoring ... 152
6.10.2 Preparing Temperature Monitoring ... 152
6.10.3 Performing Temperature Monitoring ... 153

7 Configuration ... 154

7.1 Configuring the System ... 154
7.1.1 General System Settings (User DEFAULT) ... 154
7.1.2 Configuration of Views ... 156

7.1.3 Printer settings ... 160
7.1.4 Configuration of the Fax Transmission (User DEFAULT) ... 165
7.2 Configuration of the Monitoring Functions ... 165
7.2.1 ECG Monitoring ... 165
7.2.2 Oximetry ... 167
7.2.3 CO2 ... 169
7.2.4 IBP ... 170
7.2.5 CPR feedback ... 171
7.3 Alarm Configuration ... 172
7.3.1 Configuring Alarm Settings ... 172
7.3.2 Alarm Limit Settings ... 172
7.3.3 Setting Alarm Limits for Monitoring Functions Manually ... 173
7.3.4 Setting the Alarm Limits for Monitoring Functions Automatically ... 174
7.4 Advanced settings (for persons responsible for the device) ... 175
7.4.1 Authorisation for Persons Responsible for the Device ... 175
7.4.2 General System Settings (Person responsible for the device) ... 175
7.4.3 Configuration of Manual Events (Persons Responsible for the Device) ... 178
7.4.4 Configuration of the Defibrillation Function (Persons Responsible for the Device) ... 179
7.4.5 Filter Settings (Persons Responsible for the Device) ... 181
7.4.6 Alarm Configuration (Persons Responsible for the Device) ... 182
7.4.7 Basic Configuration of the Views (Persons Responsible for the Device) ... 184
7.4.8 Configuration of Master Data (Persons Responsible for the Device) ... 185
7.4.9 Configuration of ECG Measurement and ECG Interpretation (Persons Responsible for the Device) ... 186
7.4.10 Demo Mode (Persons Responsible for the Device) ... 189
7.4.11 Data Protection Settings (Persons responsible for the device) ... 189
7.4.12 Configuration of the Metronome and CPR feedback (Persons Responsible for the Device) ... 190
7.4.13 Configuration of Non-Invasive Blood Pressure Measurement (NIBP) (Persons Responsible for the Device) ... 193
7.4.14 Printer Settings (Persons Responsible for the Device) ... 194

8 Data Management ... 195

8.1 Creating a Patient File ... 195
8.2 Event key ... 196
8.3 Handling Data ... 196
8.4 Master data ... 197
8.5 Browser Key ... 198
8.5.1 Protocol ... 198
8.5.2 Mission Browser ... 200
8.6 Analysis of the Data with corpuls.manager REVIEW ... 201

8.6.1 Recording of Realtime Data (RTD) tracks ... 202
8.7 Screenshot ... 202
8.8 Insurance card reader (option) ... 202

9 Telemetry 3.0 ... 204

9.1 Configuration of Telemetry (Persons Responsible for the Device) ... 205
9.1.1 Installing the SIM Card ... 206
9.1.2 Configuration GSM modem ... 206
9.1.3 Configuration GPRS connection ... 207
9.1.4 WLAN interface configuration ... 207
9.1.5 Saving telemetry connections (Phonebook) ... 207
9.1.6 Deleting Telemetry Connections (Persons responsible for the device) ... 208
9.2 Configuration of Telemetry Services (Persons Responsible for the Device) ... 209
9.2.1 Configuring a connection to corpuls.mission LIVE ... 211
9.2.2 Configuration of fax transmission ... 212
9.2.3 Configuration of mission upload ... 212
9.3 Configuration of (W)LAN networks (Persons Responsible for the Device) ... 213
9.3.1 Manual network settings ... 214
9.3.2 Uploading Certificates (Persons Responsible for the Device) ... 214
9.4 Data transmission options ... 214
9.4.1 Live data transmission to corpuls.mission LIVE ... 215
9.4.2 Sending a D-ECG ... 216
9.4.3 Manually uploading missions to an FTP server ... 217
9.4.4 Manually Establishing a Connection to the Mobile Network ... 218
9.5 Bluetooth ... 218
9.5.1 Configuring a Bluetooth® data interface (Persons Responsible for the Device) ... 219
9.5.2 Configuring Bluetooth® connections ... 220
9.5.3 Deleting Bluetooth Connections (Persons Responsible for the Device) ... 221
9.5.4 Establishing and interrupting a Bluetooth® connection ... 221
9.5.5 Data management via Bluetooth® ... 222
9.5.6 Bluetooth connection with corpuls cpr ... 223
9.6 Offline mode ... 223
9.7 webMessage ... 223
9.8 Display of the corpuls.mission QR Code ... 224

10 Maintenance and Tests ... 225

10.1 General Information ... 225
10.2 Function checks ... 226
10.2.1 Daily Checks of the Device ... 227
10.2.2 Monthly Functional Test ... 231
10.3 Automatic self-test: ... 234

10.4 Regular Maintenance Work ... 234
10.4.1 Technical Safety Check ... 234
10.4.2 Metrological Check ... 234
10.4.3 Repair and Service ... 234
10.5 Loading the printer paper ... 235
10.6 Replace battery ... 236
10.7 Cleaning, Disinfection and Sterilisation ... 237
10.7.1 Recommended Cleaning- and Disinfecting Agents ... 237
10.7.2 Monitoring Unit, Patient Box and Defibrillator/Pacer ... 238
10.7.3 Shock paddles ... 239
10.7.4 Baby shock electrodes ... 240
10.7.5 Therapy master cable ... 240
10.7.6 Cable for monitoring functions ... 241
10.7.7 Oximetry sensor ... 241
10.7.8 CO2 sensor ... 241
10.7.9 NIBP Cuffs and connecting hose ... 241
10.7.10 IBP transducer cable ... 242
10.7.11 Temperature sensor ... 242
10.7.12 Accessory Bag, Carrying Strap and Backpack Carrying Strap ... 242
10.7.13 Charging brackets and MagCode connectors ... 242
10.8 Approved Accessories, Spare Parts and Consumables ... 242

11 Procedure in Case of Malfunctions ... 243
11.1 Device alarms ... 243
11.2 Troubleshooting and Corrective Actions ... 257
11.3 Notifications Message Line and Information in the Protocol ... 268

Appendix ... 282
A Symbols ... 282
B List of Abbreviations ... 289
C Checklist Functional Check ... 290
D Reset to factory settings ... 291
E Technical specifications ... 301
F Biphasic defibrillator ... 319
G Safety Information ... 325
H ECG Analysis during Semi-automatic Defibrillation (AED mode) ... 330
I Major Performance Characteristics ... 333
J Guidelines and Manufacturer's Declaration ... 334
K Warranty ... 339
L Protection Rights and Patents ... 340
M Disposal of the Device and Accessories ... 341

N Note on Data Protection 342
O Residual Risks 343
P User Manual primeCPR feedback sensor (P/N 04235.4) 345
Q corpuls3 HYPERBARIC (HBO) 349
R RED declaration of conformity 350
S List of Illustrations 351
T List of Tables 356

Index 359

Conventions

The following conventions apply in this user manual:

Key	Key on monitoring unit, patient box and defibrillator/pacer
[Softkey]	Softkey on the monitoring unit
"Menu item" ► "Submenu item"	Menu items of the main menu and parameter and curve context menus
"Alarm message"	Messages for physiological and technical alarms on the monitoring unit and patient box
VERBAL MESSAGE	Spoken operating instructions and alarm messages in the AED mode
Operating instruction/ information	Operating instructions and information in the message line of the monitoring unit

1 Safety

1.1 General

The corpuls3 may only be operated if:

- in technically perfect condition;
- used as intended (see chapter 2 Intended Purpose, page 5);
- the instructions of this user manual are followed.

Malfunctions must be eliminated immediately (see chapter 11 Procedure in Case of Malfunctions, page 243).

If in this user manual the corpuls3 is mentioned, the information is valid for all functions and all product variants, unless indicated otherwise.

corpuls3 HYPERBARIC

For the product variant corpuls3 **HYPERBARIC** read and understand Appendix Q corpuls3 HYPERBARIC (HBO), page 349.

1.2 Related Documents

To guarantee safe and trouble-free operation, read the respective accompanying documents of the accessories.

1.3 Information Labels, Warning Labels and Symbols on the Device



Read the user manual



Read the additional instructions in the user manual



USB port (devices up to 09/2010)



BF (body floating, defibrillation-proof):
An insulated application component of this type is approved for external and internal use on the patient



CF (cardiac floating, defibrillation-proof):
An insulated application component of this type is authorised for use directly on or in the patient's heart



Equipotential bonding



Protection class IP55



Symbol for 2nd generation of radio module (hardware)



Symbol for a 3rd generation module which is incompatible with 2nd or 1st generation modules due to hardware modifications.

	Insurance card reader (option)	
	The WEEE symbol (Waste Electrical and Electronic Equipment) indicates that the device should be returned to the manufacturer for proper disposal and recycling.	
	Symbol for the separate collection of batteries	
CE 0123	CE symbol; the number indicates the competent notified body.	
	The RCM (Regulatory Compliance Mark) indicates a device's compliance with applicable ACMA (Australian Communications and Media Authority) technical standards for telecommunications, radiocommunications or broadcasting equipment.	
M-LNCS™ only	M-LNCS® needs a 15-pole intermediate cable. Make sure that the oximetry sensor is compatible with the oximetry intermediate cable.	
MD	Medical device	Indicates that the item is a medical device.
	Repackaging	To identify that a modification to the original medical device packaging configuration has occurred.
	Importer	Indicates the entity importing the medical device into the locale.
	Distributor	Indicates the entity distributing the medical device into the locale.
UDI	Unique Device Identifier	Indicates a carrier that contains Unique Device Identifier information.
	Version	Displays the device software version that is used.
	Caution	Symbol on the rating plate of the battery. Handling the battery requires increased care.
	Do not heat up battery	Symbol on the rating plate of the battery. The battery may not be heated.
	Do not open or damage the battery	Symbol on the rating plate of the battery. The battery may not be damaged or opened.
	Rechargeable	Symbol on the rating plate of the battery. The device may only be operated with rechargeable batteries. The battery has to be inserted in correct polarity.

Table 1-1 Information Labels, Warning Labels and Symbols on the Device

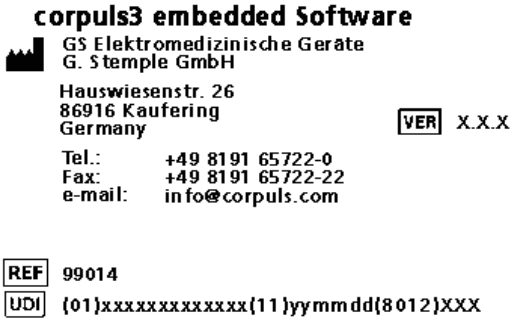

Fig. 1-1 Example of Software-UDI corpuls3

1.4 Warnings

A number of actions during the operation of the corpuls3 carry risks for patients, users and third parties. Such actions are indicated by warning notices in this user manual.

The following symbols are used:



Warning

"Warning" denotes a dangerous situation.
If the warning is not heeded, extremely severe or fatal injuries or substantial material damage may occur.



Caution

"Caution" denotes a possibly dangerous situation.
If not heeded, minor injuries or slight material damage may occur.

Note These paragraphs contain information which must be read and understood.

1.5 Special Types of Risk

Electric shock The defibrillator emits powerful electrical energy. Severe injuries or death may result if the defibrillator is not used in accordance with this user manual.

- Familiarise yourself with the device and this user manual.

The defibrillator must not be opened. Internal components may carry high voltages.

- If a fault is suspected, have the device checked by the authorised sales and service partner and, if necessary, repaired.

The defibrillator may cause electromagnetic interference, particularly during charging and on triggering the defibrillation shock. The functioning of devices operated in the vicinity may be compromised.

- Check the effects of the defibrillator on other devices, preferably before an emergency occurs.

EMC Electromagnetic fields of other devices may invalidate the ECG readings.

ECG analysis may be impaired. It may be impossible to trigger a defibrillation shock or pacer pulse.

- Read and follow the instructions for operation of the device in chapter 2 Intended Purpose, page 5 in addition to the safety warnings during use.

It is essential to read and follow the safety information in the appendix G (from page 282).

1.6 Cybersecurity

The purpose of cybersecurity is to protect companies and organisations from unauthorised data access by third parties and from resulting damage such as espionage, sabotage and hacker attacks. For safe operation of the corpuls3, the following points are strongly recommended:

- Change codes and PINs when commissioning the device
- Use FTPiS- or FTPeS- instead of FTP servers for mission upload
- Use different login data for FTP- and FTPiS servers
- Perform regular backups of mission data via export to a PC or via upload to a corpuls.mission ANALYSE server (see chapter 8.3 Handling Data)
- Delete all mission files from the device after backup or upload is complete
- Keep the data anonymisation option enabled (see chapter 7.4.11 Data Protection Settings (Persons responsible for the device), page 189).

General cybersecurity recommendations:

- Do not use sequences of numbers (e.g. 5678) for codes and PINs
- Avoid default user names
- Use strong passwords with more than 12 characters (incl. upper and lower case, special characters and numbers)

A Bluetooth connection is only possible with already paired devices (see corpuls cpr Manual chapter 7.6.5 Pairing and Connecting Bluetooth Devices).

2 Intended Purpose

2.1 Intended Purpose

The corpuls3 is intended

- for measurement and monitoring of vital functions as well as
- defibrillation, cardioversion or cardiac pacing of patients

in the preclinical and clinical field by qualified medical staff trained in the use of the device.

The following monitoring- and diagnostic functions are available:

- ECG
- Diagnostic ECG

Optional:

- Oximetry (SpO_2)
- Extended oximetry (SpCO®, SpHb, SpMet®)
- Capnometry (CO_2)
- Temperature (Temp)
- Non-invasive blood pressure monitoring (NIBP)
- Invasive blood pressure monitoring (IBP)
- CPR feedback

2.2 Indications and Contraindications

The indications and contraindications (see Table 2-1) are derived from standard emergency medical practice and the applicable guidelines.

Field of medicine	Indication	Contraindication
Defibrillation, AED mode	Shockable cardiac arrest (resuscitation) Ventricular fibrillation Tachycardias	Normal ECG rhythm Spontaneous respiration Palpable pulse or other indications of spontaneous circulation Pulseless electrical activity (PEA) Asystole Patient < 12 month old
Defibrillation, manual mode	Shockable cardiac arrest (resuscitation) Ventricular fibrillation Tachycardias	Normal ECG rhythm Spontaneous respiration Palpable pulse or other indications of spontaneous circulation Pulseless electrical activity (PEA) Asystole
Cardioversion	Certain atrial and ventricular arrhythmias	Non-cardiovertable patient statuses and heart rhythms

Field of medicine	Indication	Contraindication
Pacer	Transcutaneous pacing in tachy-/bradycardial arrhythmias	Normal ECG rhythm Asystole Ventricular fibrillation
ECG, basic and diagnostic	Monitoring and recording of ECG and heart rate of adults, children and neonates with and without cardiac dysfunctions.	n/a
Oximetry	Vital parameters to be monitored, deviating/ conspicuous/missing vital parameters	n/a
Capnometry		n/a
NIBP		n/a
IBP		n/a
Temperature		n/a
CPR feedback	Cardiac arrest (resuscitation)	< 8 years old With contraindicated chest compressions

Table 2-1 Indications and Contraindications

Field of medicine	Body area
Defibrillation, AED mode	Thorax, heart, skin
Defibrillation, manual mode	Thorax, heart, skin
Cardioversion	Thorax, heart, skin
Pacer	Thorax, heart, skin
ECG, basic and diagnostic	Thorax, extremities, skin
Oximetry	Extremities
Capnometry	Head (airways)
NIBP	Extremities
IBP	Whole body
Temperature	Whole body
CPR feedback	Thorax, skin

Table 2-2 Body areas of application

2.3 Appropriate Use

The corpuls3 is intended for use in emergency services on location, in an ambulance, in air rescue vehicles (fixed- or rotary wing aircraft), in the emergency room or similar areas of a hospital. It is also intended to be used during transport of a patient.

The corpuls3 is approved for monitoring in operating diagnostic X-ray units (e. g. computed tomography). Exempt from this is the oximetry option, because the readings might be falsified. When equipped with the HBO (hyperbaric oxygen therapy) option, the corpuls3 is approved for operation in a multiplace hyperbaric chamber up to 3 barg and an oxygen concentration of < 23%.

Intended purpose of corpuls3 includes the use of accessories which are

- approved by the manufacturer (see chapter 10.8 Approved Accessories, Spare Parts and Consumables, page 242) and
- appropriate for the function and patient.



Warning

Risk of electrical shock

Defibrillation protection for patients, user and third parties **cannot** be guaranteed, if accessories other than those authorised by the manufacturer are used.

The therapeutic functions of defibrillation, cardioversion and pacer must only be performed with constant monitoring of the patient.

If monitoring functions are performed, the patient's condition must be checked regularly even if the alarm function is switched on.

Note The corpuls3 and the corpuls3T are devices of their own whose modules are **not** interchangeable.

The monitoring unit of the corpuls3 (P/N 04100) may only be used in combination with the patient box (P/N 04200) and the defibrillator/pacer (P/N 04300) or the defibrillator/pacer SLIM (P/N 04301).

The monitoring unit of the corpuls3T (P/N 04101) may only be used in combination with the patient box (P/N 04201) and the defibrillator/pacer (P/N 04302).

2.4 Operating Staff/Intended Users

The corpuls3 may only be operated by trained medical staff of for example hospitals, doctor's offices and emergency medical services, as well as of authorities and public safety organisations.

The qualified staff must be

- trained in proper handling, use and operation of the device and of the approved accessories as well as be

trained in basic and advanced resuscitatory measures (BLS and ALS).

Instructing person The initial instruction and training on the device must be performed by the manufacturer or by authorised personnel.

2.4.1 Restrictions of Use of Therapeutic Functions

Use of the therapeutic functions (defibrillation, cardioversion and pacing) is restricted to qualified and authorised staff.

Refresher courses in therapeutic use The manufacturer recommends that persons who use the therapeutic functions of the device should take part in refresher courses regularly. The operating company/operator is responsible for offering such refresher courses.

2.4.2 Maintenance

Maintenance work may only be performed by persons who are appropriately trained and authorised by the manufacturer. Non-observance and loss of perfect technical condition due to this will result in invalidation of claims under the warranty.

2.5 Intended Patient Population

Monitoring and diagnostic functions of the corpuls3 (ECG, oximetry, extended oximetry, capnometry, temperature, NIBP and IBP) are used for adult, paediatric and neonatal patients with (suspected) disorders of the respiratory and/or cardiovascular system. Therapy functions of the corpuls3 (defibrillation, cardioversion, external pacing) are used for adult, paediatric and neonatal patients with cardiac arrest or cardiac arrhythmia. The CPR Feedback System is approved for patients from 8 years of age. Defibrillation in AED mode is not recommended for patients under 12 months of age.

3 Introduction

3.1 Components

The corpuls3 is a portable device with a modular structure which can be used

- as a defibrillator/monitor or
- as a full patient monitor in its own right.

Monitoring, diagnostic and therapeutic functions

The corpuls3 provides comprehensive monitoring, diagnostic and therapeutic functions for treatment of emergency and intensive-care patients. Especially as part of the resuscitation of emergency patients, defibrillations, cardioversions or pacer therapies can also be performed, in addition to the monitoring of vital parameters.

Up to 6 leads can be displayed on the screen at the same time. A 12-lead ECG function allows the user a comprehensive ECG diagnosis, which can be optionally supplemented by ECG analysis software.

Further monitoring functions include oxygen saturation measurement (pulse oximetry), carbon dioxide measurement (capnometry) and temperature measurement, in addition to non-invasive and invasive blood pressure monitoring. The recorded measuring values can be displayed both numerically and as a curve. Configurable alarms draw the user's attention to current changes in the patient's condition. All measured values or logs can be printed out on paper.

Documentation functions

The corpuls3 has extensive documentation functions for internal recording of events, alarms and logs. These can be transferred to external systems for further processing and archiving.

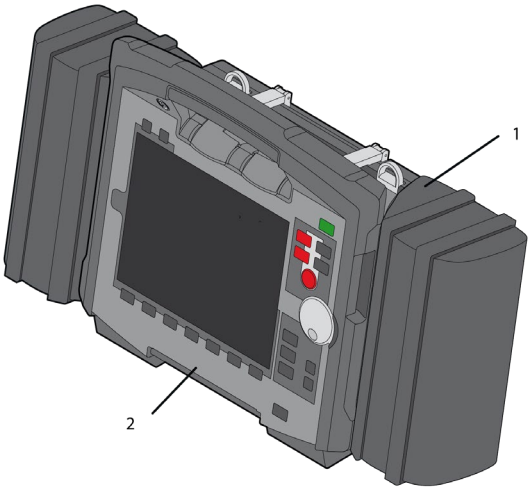

Fig. 3-1 Compact device

1 Accessory bag
2 Printer

Tilting the device

When equipped with the original defibrillator/pacer (P/N 04300), the corpuls3 can be tilted vertically up to 30°. With the defibrillator/pacer unit SLIM (P/N 04301), this is not possible.

Depending on the mission conditions, the monitor can be adjusted to the appropriate visual angle.

The system can be divided into the following three modules:

- Monitoring unit
- Patient box
- Defibrillator/pacer

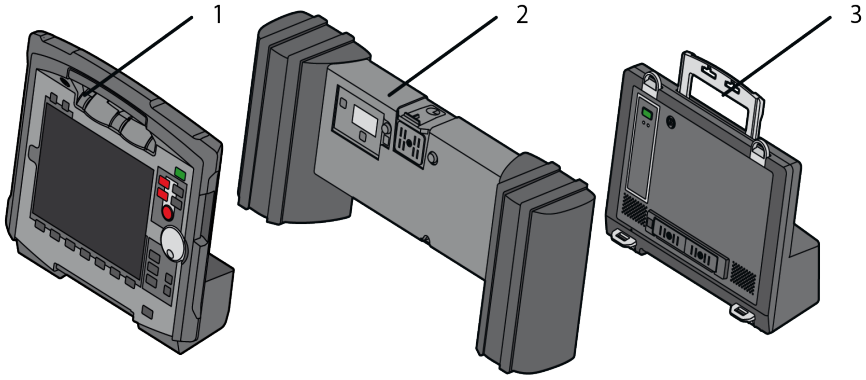

Fig. 3-2 Individual modules

1 Monitoring unit
2 Patient box
3 Defibrillator/Pacer

3.2 Device Design

Usage options The three modules monitoring unit, patient box and defibrillator/pacer can operate via an infrared connection or, if separated, via radio connection.

The connection status is shown on the screen of the monitoring unit (see Table 4-2, page 41) and the patient box (see Table 4-3, page 45).

Radio connection Communication between the modules in semi-modular and modular use is performed by radio up to a distance of 10 m in open terrain.

Infrared connection In the mechanically connected state, the modules communicate via an optical infrared connection.

Note If the radio connection is interrupted, the modules have to be connected to each other mechanically. The corpuls3 switches automatically from radio connection to infrared connection in this case.

Note The antenna of the radio unit in the patient box is located at the top. In case the antenna is shadowed, for example by metallic or metallised objects, the maximal reach of the radio connection may be reduced. This may happen, for example, when the patient box is placed between the patient's legs on the stretcher. If possible, choose a position for the patient box that allows unimpeded view to the other modules.

Note The corpuls3 and the corpuls3T are devices of their own whose modules are **not** interchangeable.

The monitoring unit of the corpuls3 (P/N 04100) may only be used in combination with the patient box (P/N 04200) and the defibrillator/pacer (P/N 04300) or the defibrillator/pacer SLIM (P/N 04301).

The monitoring unit of the corpuls3T (P/N 04101) may only be used in combination with the patient box (P/N 04201) and the defibrillator/pacer (P/N 04302).

The following combinations are possible:

Device Design	corpuls3	corpuls3T (Defibrillator/pacer SLIM)
1. Compact device: All three modules are connected mechanically.	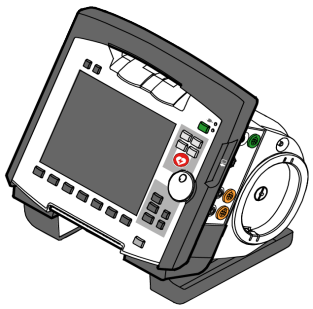	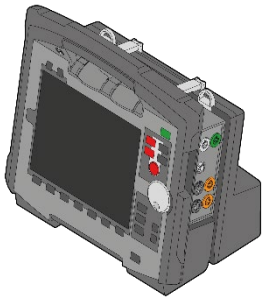
2. Semi-modular use: Monitoring unit and patient box are connected, defibrillator/pacer is disconnected.	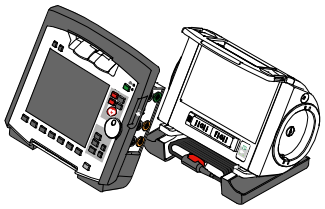	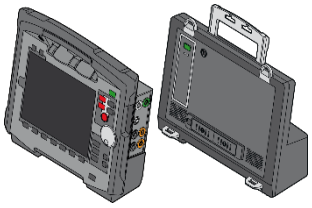
3. Semi-modular use: Monitoring unit and defibrillator/ pacer are connected, patient box is disconnected.	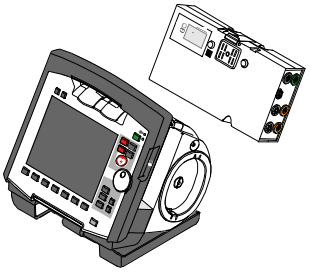	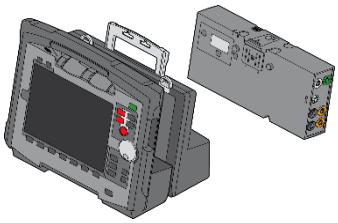
4. Modular use: Monitoring unit, patient box and defibrillator/ pacer are disconnected mechanically.	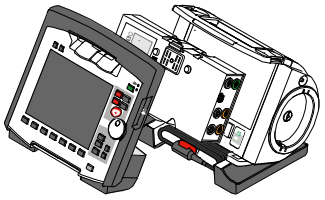	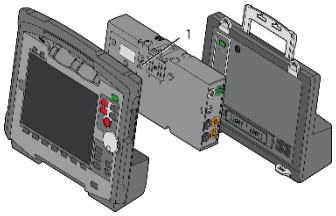

Fig. 3-3 Usage options of the modular corpuls3

The following combinations are possible when used as a stand-alone patient monitoring system:

1. Compact monitor: Monitoring unit and patient box are connected mechanically.	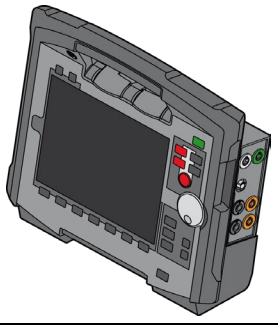

2. Modular use: Monitoring unit and patient box are disconnected.	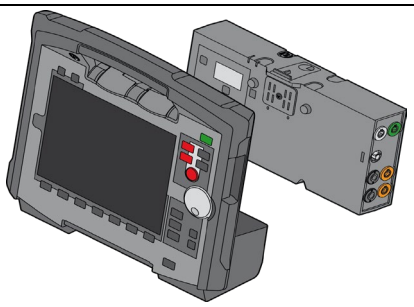
3. Patient box: Patient box in stand-alone use for temporary initial monitoring.	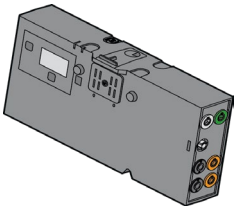

Fig. 3-4 Usage options of the modular corpuls3 as a patient monitoring system

3.2.1 Pairing (Connection Authorisation)

The modules of the corpuls3 can be connected to form a functional unit by means of two procedures:

- Pairing and
- Ad-hoc connection

The corpuls3 thus provides the option of substituting individual modules of one compact device for individual modules of the same type from another corpuls3.

Note It is not possible to connect a monitoring unit to more than one patient box or one defibrillator/pacer at the same time.

Pairing Pairing is a connection authorisation that enables the communication between wirelessly connected modules.

Ad-hoc connection An ad-hoc connection allows the use of mechanically connected modules without having to perform a pairing beforehand.

Prerequisite For both procedures the following prerequisites apply:

1. For a pairing, monitoring unit, patient box and defibrillator/pacer have to be equipped with radio modules of the same type (hardware version).
2. If this is not the case, if the hardware version of the radio modules is different (1st and 2nd generation), those modules can only form an ad-hoc connection.
3. For both a pairing and for an ad-hoc connection all modules have to be equipped with an identical software version.

Note As of July 2011 the corpuls3 comes equipped with a 2nd generation radio module. This new radio module is not compatible with those of the 1st generation.

Note As of July 2017 the corpuls3 comes equipped with 3rd generation hardware. These are not compatible with those of the 1st or 2nd generation.

Labelling of the radio modules The corpuls3 modules with the 2nd and 3rd generation radio module are labelled with a number symbol. This symbol is attached at the following places:

- Monitoring unit: on the front side, top left,
- Patient box: on top,
- Defibrillator/pacer: on the rear side, on top,
- Defibrillator/pacer SLIM: on front side, top left.



The number symbol indicates a 2nd- or 3rd-generation module.

Starting a pairing

To start a pairing, proceed as follows:

1. Connect the monitoring unit, the patient box and, if present, the defibrillator/pacer mechanically.
2. The following options are available:
   a) The message `Perform pairing?` appears.
   Confirm the message with the softkey [Start].
   b) The message `Perform pairing?` does not appear:
   Select in the main menu "System" ► "Start Pairing".
3. The message `Pairing successful` appears on the screen of the monitoring unit. The three modules now are paired. The corpuls3 is ready for operation via radio connection.

Privacy Risk

Pairing with unknown Bluetooth devices may lead to illegal access of personal data. To minimize the risk, perform a pairing only with trusted Bluetooth devices.

Security Risk

A jamming attack carried out in the frequency band of Bluetooth represents a security risk even if the corpuls3 is not the target of the attack. If the radio connection between the modules is interrupted and seems compromised, operate the device in compact mode.

Starting an ad-hoc connection

To start an ad-hoc connection, proceed as follows:

1. Connect modules mechanically.
2. Do **not** confirm the message `Perform pairing?`.

The message `Ad-hoc connection [MODULE]`, e g. Ad-hoc connection P-box or `Ad-hoc connection Defib` appears on the screen of the monitoring unit. The corpuls3 is ready for operation.

Note

The connection status is shown by symbols in the status-/alarm line in the upper right corner of the monitoring unit (see Table 4-2 Module connection status, page 41 and Appendix A Symbols, page 282).

Note

If a new pairing is performed between a monitoring unit and a patient box or with another compact device, the previously saved radio connection authorisation to the patient box or to the defibrillator/pacer is automatically deleted.



Caution

Risk of data management malfunction

When connecting different patient boxes by ad-hoc connection, there can be inconsistent entries in the data management.



Caution

Risk of module communication failure

During an ad-hoc connection a radio connection to other modules is not possible.



Warning

Risk of module communication failure

If two modules connected by an ad-hoc connection are separated, a radio connection to the original patient box and defibrillator/pacer is automatically re-established.

3.2.2 Monitoring unit

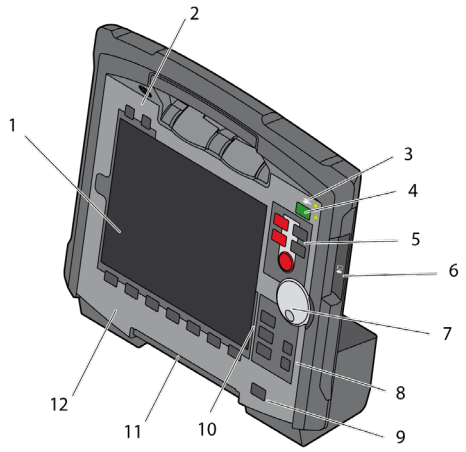

Fig. 3-5 Monitoring unit

1 Screen
2 Function keys Alarm and Event
3 LED Power supply/State of charge
4 On/Off key with LED Operating status
5 Defibrillation mode function keys
6 Insurance card reader
7 Jog dial and alarm light
8 Function keys for navigation
9 Print key
10 Operating mode keys
11 Printer
12 Softkeys

The monitoring unit is the central user interface of corpuls3. The monitoring unit comprises the screen (item 1), the printer (item 11) and the insurance card reader (item 6, option), as well the jog dial (item 7), the function keys (items 2, 5, 8 and 9), the operating mode keys (item 10) and the softkeys (item 12).

The jog dial is used to navigate in the main menu, the parameter and curve context menus and in the display areas on the screen.

An alarm light is integrated into the jog dial.

The monitoring-, pacer- and mission browser functions can be selected directly by pressing the operating mode keys.

Softkey assignments

Softkey assignment varies depending on the selected function. Softkey assignments are described in the chapters dealing with the respective functions.

Interfaces

Fig. 3-6 shows the interfaces at the monitoring unit:

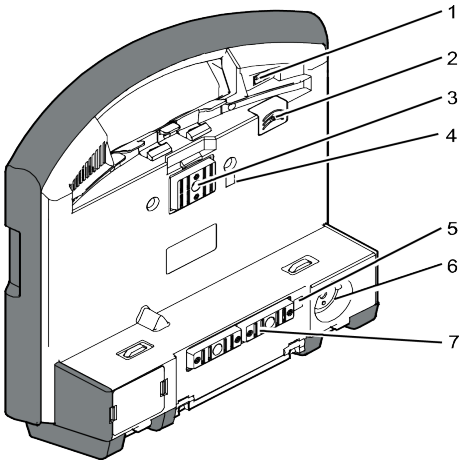

Fig. 3-6 Monitoring unit, rear view

1 Cover for LAN interface (option)
2 SIM card slot (slot for SIM card tray)
3 Contact element with patient box
4 Infrared interface with patient box
5 Infrared interface with defibrillator/pacer
6 Charging cable magnetic plug socket
7 Contact element with defibrillator/pacer

3.2.3 Patient Box and Accessory Bag

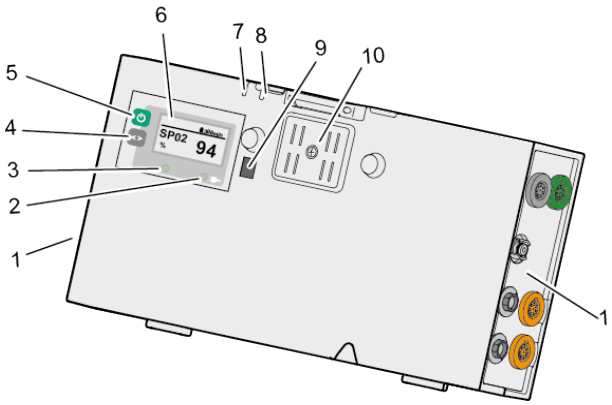

Fig. 3-7 Patient box (illustration may differ)

1 Sensor interfaces
2 Multifunction key
3 Multifunction LED operating status/HR/alarm
4 On/Off key
5 LED Power supply/State of charge
6 Screen
7 Microphone
8 Acoustic alarm (pulse signal indicator)
9 Infrared interface with monitoring unit
10 Contact element with monitoring unit

The patient box monitors and records the monitoring sensor signals. The sensors of the various monitoring functions are connected to it.

The patient box can be used as a stand-alone unit (without the monitoring unit) for patient monitoring. The screen (item 6) on the patient box shows the following:

- The readings of the monitoring functions,
- Physiological and technical alarms,
- Heart rate is visually represented by an LED (item 3).

Patient Box Interfaces

Right-hand side

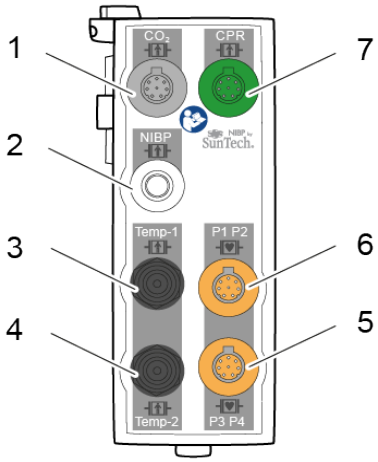

Fig. 3-8 Patient Box Interfaces, right hand side

1 CO_2: sensor for capnometry
2 NIBP: sensor for non-invasive blood pressure monitoring
3 Temp-1: temperature sensor
4 Temp-2: temperature sensor
5 P3 P4: sensor for invasive blood pressure monitoring (channels 3 and 4)
6 P1 P2: sensor for invasive blood pressure monitoring (channels 1 and 2)
7 CPR: CPR feedback sensor

Left-hand side

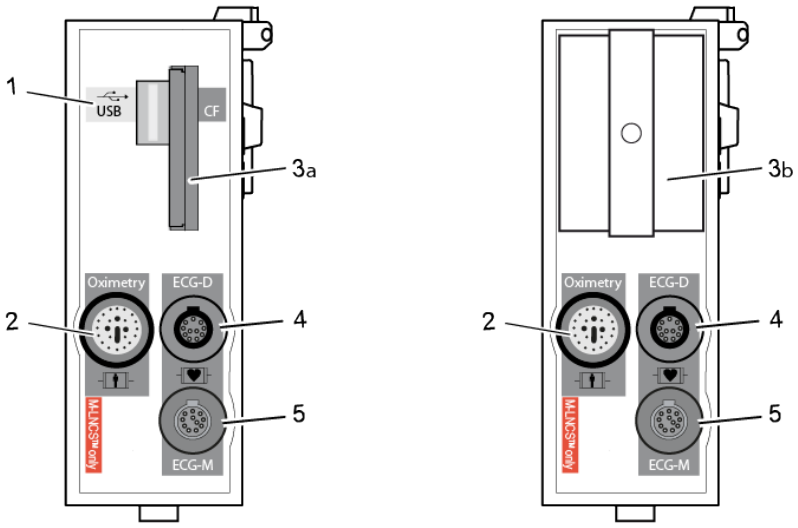

Fig. 3-9 Patient Box Interfaces, left hand side

1 USB port (devices up to 09/2010)
2 Oximetry: interface for oximetry sensor
3a CF: Slot for CompactFlash® card for data storage
3b Fixed cover over CF card
4 ECG-D: complementary ECG diagnostic cable
5 ECG-M: ECG monitoring cable

Note At the moment, connecting USB devices or –cables to the USB port is not allowed.

Accessory bag

An accessory bag is available for the patient box (P/N 04221.1).

The accessory bag is used to store the preconnected cables as well as the sensors and ECG electrodes, so that they are quickly accessible during use.

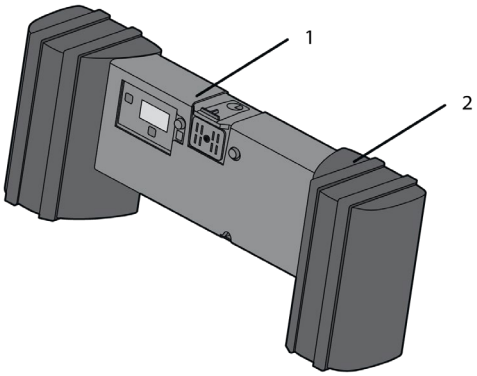

Fig. 3-10 Patient Box with Accessory Bag

1 Patient box
2 Accessory bag

Chapter 4.5 Accessory bag, page 59 contains information on installing and packing the accessory bag.

3.2.4 Defibrillator/pacer

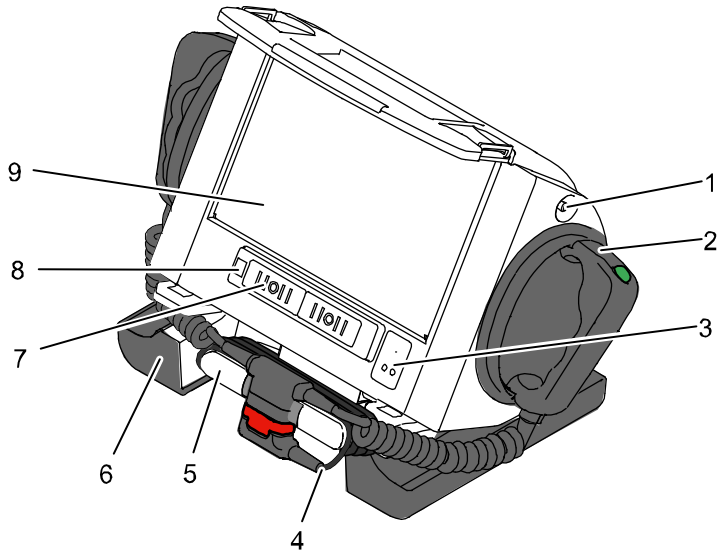

Fig. 3-11 Defibrillator/Pacer

1 Equipotential bonding pin with insulating cap
2 Shock paddle
3 On/Off key
4 Therapy master cable with plug
5 Cable socket with test contact
6 Stand and storage compartments
7 Contact element with monitoring unit
8 Infrared interface with monitoring unit
9 Compartment for corPatch electrodes

The therapy electrodes have to be connected to the therapy master cable (Fig. 3-11, item 4). The therapy master cable can be wound around the socket (Fig. 3-11, item 5). The plug can be lodged in the socket for storage.

Via the equipotential pin (Fig. 3-11, item 1) equipotential bonding can be performed in clinical use. For this, the insulating cap has to be removed and the cable of the equipotential bonding device has to be connected to the equipotential bonding pin.

The shock paddle marked with the green label APEX must be positioned in the right-hand shock paddle holder to ensure that the twistproof plug connector on the therapy master cable is correctly aligned. For guidance, identical labels for the APEX and STERNUM shock paddle are located on the side of the defibrillator/pacer. The plug can be lodged in the socket for storage.

The stand (Fig. 3-11, item 6) additionally serves as a storage compartment for electrode gel and razors, etc.

The angle of the defibrillator/pacer (not the SLIM) can be tilted vertically (30°) to achieve an optimal view of the screen during use.

Note The requirements from IEC 60601-1 for medical electric systems have to be taken into account.

3.2.5 Defibrillator/Pacer SLIM

The defibrillator/pacer SLIM differs from the previous defibrillator/pacer only in terms of form, size and weight.
The basic functions are identical.

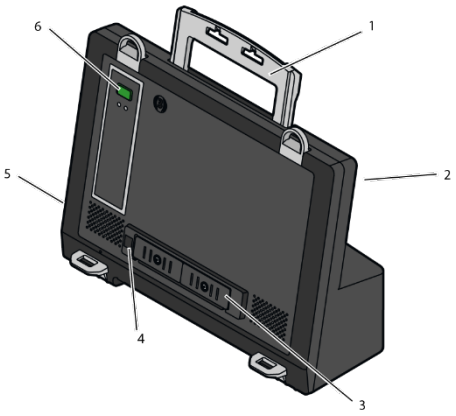

Fig. 3-12 Defibrillator/Pacer SLIM

1 Carrying handle and lock
2 Therapy socket
3 Contact element with monitoring unit
4 Infrared interface with monitoring unit
5 Equipotential bonding pin with insulating cap
6 On/Off key

The therapy electrodes have to be connected to the therapy socket (Fig. 3-12, item 2). Via the equipotential pin (Fig. 3-12, item 5) equipotential bonding can be performed in clinical use. For this, the insulating cap has to be removed and the cable of the equipotential bonding device has to be connected to the equipotential bonding pin.

Note The requirements from IEC 60601-1 for medical electric systems have to be taken into account.

3.2.6 Brackets

Various brackets, with and without power supply, are available for the device in compact, semi-modular or modular use.

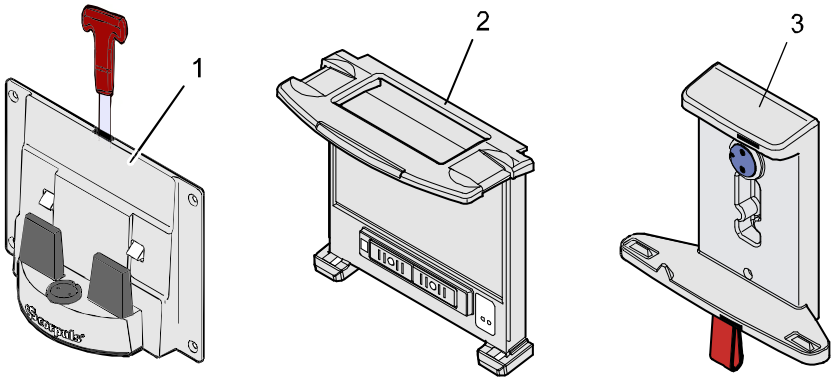

Fig. 3-13 Brackets

1 Defibrillator/compact device bracket
2 Monitoring unit bracket
3 Patient box bracket

How to insert the modules into the brackets is described in chapter 4.6 Inserting the Device into the Brackets, page 63.

Note The defibrillator/compact device charging bracket has to be installed vertically (not on the floor or the ceiling), to ensure sufficient contact with the MagCode connector via gravity.

Bracket	Application	Power supply
Bracket for defibrillator/ compact device	Defibrillator/pacer and all modules connected mechanically to the defibrillator/pacer	▪ 12 V DC ▪ No power supply
Monitoring Unit Bracket	Monitoring unit and patient box connected mechanically to the monitoring unit	▪ 12 V DC ▪ No power supply
Bracket for patient box	Patient box	▪ 12 V DC ▪ No power supply

Table 3-1 Brackets and power supply options

The charging brackets can also be connected to voltages other than 12 V DC using DC/DC or AC/DC converters.

3.3 Description of the Monitoring, Diagnostic and Therapeutic Functions

3.3.1 Monitoring and Diagnostic Functions

The corpuls3 has the following monitoring and diagnostic functions:

- ECG
- Diagnostic ECG
- CPR feedback

Optional:

- Oximetry (SpO_2)
- Extended oximetry (SpCO®, SpHb, SpMet®, RRp®)
- Capnometry (CO_2)
- Temperature (Temp)
- Non-invasive blood pressure monitoring (NIBP)
- Invasive blood pressure monitoring (IBP)

ECG With the 4-pole ECG monitoring cable, the bipolar extremity leads according to Einthoven (I, II, III) and the unipolar extremity leads according to Goldberger (aVR, aVL, aVF) can be recorded and displayed on the monitor.

Diagnostic ECG By combining the 4-pole ECG monitoring cable with the complementary 6-pole ECG diagnostic cable (chest wall leads according to Wilson (V1-V6)), 12 channels can be displayed simultaneously. This enables a comprehensive ECG diagnosis which can be supported by the ECG measurement software **Glasgow Basic** and an optional ECG analysis software (**HES® Pro**, **Glasgow Full Scale**).

ECGmax With the option "ECGmax" in the application corpuls.mission **LIVE** you not only get the usual 12, but 22 ECG leads and thus a much more comprehensive picture of the heart muscle including the posterior wall and the right side. In addition, ECGmax can calculate the Cardiac Electrical Biomarker (CEB®) from the same leads.

CPR feedback During resuscitation, the CPR feedback option monitors the current compression rate and -depth of the thorax compressions by means of the corPatch CPR sensor. Speech- and text messages signal to the user whether the quality of the thorax compressions is sufficient or can be optimised.

Oximetry and extended oximetry

Besides the peripheral pulse rate (PR), oximetry measures the perfusion index (Pi) and the arterial oxygen saturation (SpO2). Extended oximetry option (available only with with Masimo rainbow SET® Technology) includes measurement of the methemoglobin level (SpMet®) and, depending on the used oximetry sensor, the level of carboxyhemogolobin (SpCO®) in percentage or the level of total hemoglobin (SpHb) in g/dl or mmol/l. Up to 6 parameter fields can be configured for display of numeric values. A curve field can display the oximetry plethysmogram. As an additional parameter, the patient's respiration rate can be derived from the plethysmogram (RRp®).

Capnometry

The capnometer, which operates according to the mainstream method, measures the CO_2 concentration in the patient's expiratory breath in real time. The CO_2 concentration, measured in mmHg or kPa, can be displayed on the screen as a capnogram. The corpuls3 allows use of capnometry in intubated and non-intubated patients. The patient's respiration rate is measured as an additional parameter.

Temperature

Up to two temperature values can be measured by means of temperature sensors and displayed as numerical values: body core temperature rectally and/or oesophageally and surface temperature.

Non-invasive blood pressure monitoring (NIBP)

The non-invasive blood pressure function (NIBP) allows blood pressure monitoring on one extremity. A selection of operating modes for adults, children and infants is available.

Invasive blood pressure monitoring (IBP)

The invasive blood pressure function (IBP) allows the invasive measurement of various different pressures as part of intensive medical care of the patient. These include, among others, arterial pressure, central venous pressure and intracranial pressure, etc.

Two interfaces are available which can be assigned as single channels or as double channels, respectively. Consequently, up to four different invasive pressure measurements can be performed simultaneously. The recorded pressure values can be displayed on the screen either as numerical parameters and/or as a curve.

3.3.2 Therapy functions

corpuls3 provides the following therapeutic functions:

- Defibrillation
- Cardioversion
- Pacer therapy

Defibrillation and Cardioversion

The defibrillator which operates with the corpuls3-specific biphasic pulse has two operating modes:

- Automatic external defibrillation (AED mode)
- Manual defibrillation and cardioversion (manual mode)

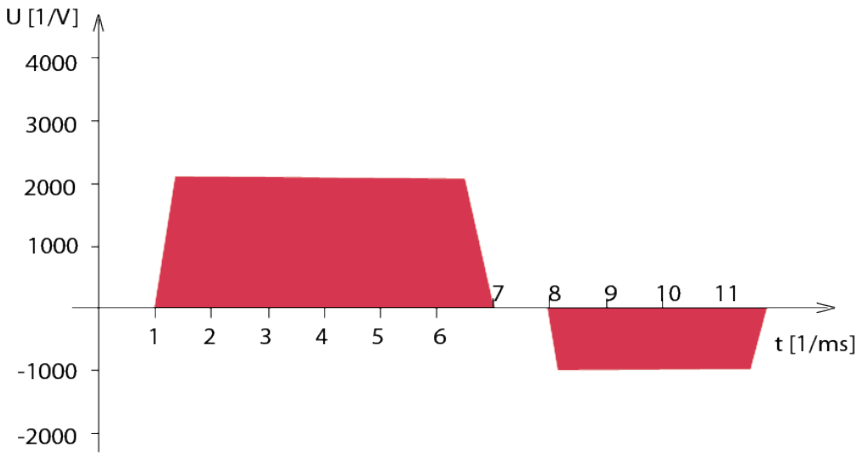

Fig. 3-14 Biphasic defibrillation pulse 6/4 (qualitative representation)

Note By default, the biphasic defibrillation impulse 6/4 is set. Upon request, the biphasic defibrillation impulse 4/3 can be configured by a service technician.

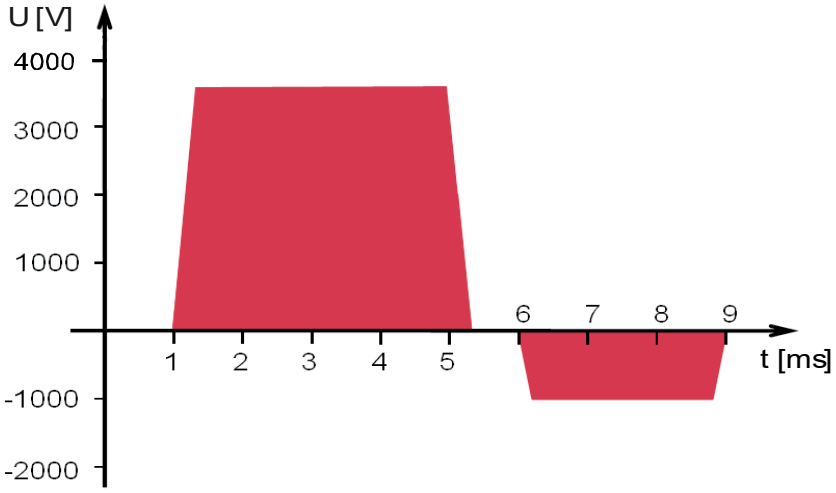

Fig. 3-15 Biphasic defibrillation pulse 4/3 (qualitative representation)

In AED mode, the user is assisted by an automated ECG analysis, verbal instructions (configurable) and a metronome (configurable). The defibrillation pulse is administered by the user.

The algorithm of the AED mode is governed by the current recommendations.

In manual defibrillation mode, the user has full freedom of action and decision-making. The metronome (configurable) is available in this mode as well.

Defibrillation Electrodes Defibrillation can be performed with corpuls3 using plate electrodes, so-called shock paddles, disposable adhesive electrodes, so-called corPatch electrodes and internal shock spoons.

Energy selection There are three different options for selecting energy in manual mode:

- **Softkeys**
  The softkeys allow a choice of predefined energy settings (depending on which electrodes are connected, e. g. for adults 100 J, 200 J).
- **Jog dial**
  The jog dial allows selection of 2 J, 3 J, 4 J and 5 J and subsequently in 5 J-increments up to a maximum energy of 200 J.
- **Shock paddles**
  By short-circuiting the shock paddles, the energy can be selected by pressing the release buttons. This function allows the same energy selection as with the jog dial.

Warning

Risk of inadequate therapy

A cardioversion may lead to ventricular fibrillation or asystole. When performing a cardioversion, mind the following:

- The ECG has to be stable with a heart rate of at least 60/min.
- The synchronisation mode has to be set to SYNC.
- The QRS marks (triangles) have to mark each QRS complex. Do **NOT** rely on the QRS-/pulse tone alone.
- The shock release has to be effected according to valid guidelines.
- To release a shock, the **Shock** key at the monitoring unit or the buttons at the shock paddles have to be held down until a shock is released.

Pacing

By electrical stimulation of the heart muscle, the external pacer of corpuls3 can supplement, positively influence or completely take over its function. The pacer emits pacing pulses to the patient's heart muscle through the corPatch electrodes attached to the chest/back.

With the pacer function, the FIX and DEMAND operating modes are available as well as the function OVERDRIVE.

FIX In the FIX operating mode, the heart muscle is stimulated regardless of the patient's own heart rate.

DEMAND The pacer only stimulates in DEMAND mode when the patient's own heart rate falls below the pre-set pacing frequency. The automatic R-wave recognition prevents pacing during the vulnerable phase of the heart.

OVERDRIVE function The OVERDRIVE function allows manual reduction of a patient's high heart rate. The maximum pacing frequency is f ⩽ 300/min.

Frequency and intensity

	Minimum	Maximum	Increments
Pacing frequency in FIX mode	30 /min	150 /min	5 /min
Pacing frequency in DEMAND mode	30 /min	150 /min	5 /min
Pacing frequency OVERDRIVE function	30 /min	300 /min	1 /min
Intensity	10 mA	150 mA	5 mA

Table 3-2 Frequency and intensity

3.3.3 Clinical Benefit

	Functional Cluster from Intended Purpose and Indication	Intended Clinical Benefit Related to Functional Cluster
1	**Defibrillation** • Shockable cardiac arrest (resuscitation) • Ventricular fibrillation • Tachycardias	The defibrillation therapy feature can terminate life-threatening cardiac tachyarrhythmias by delivering a therapeutic dose of electric current to the heart. Defibrillation can be done either in manual mode or in semi-automated mode (automated external defibrillation, AED mode). The user can be assisted by audio commands, a metronome, and a visualization of the CPR cycle. In AED mode, the shock approval is made by an automatic ECG analysis (see ECG). The defibrillation pulse is administered by the user. In combination with a corpuls cpr chest compression device, the patient monitor / defibrillator can provide automated interruption of the chest compressions for rhythm analysis and shock delivery which allows for a short hands-off time.
2	**Cardioversion** Certain atrial and ventricular arrhythmias	The cardioversion therapy feature can terminate pathological atrial and ventricular rhythms with the aim to restore normal heart activity by delivering a therapeutic dose of electric current to the heart synchronized to the peak of an R-wave.
3	**Pacer** Trans-cutaneous pacing in tachy-/bradycardial arrhythmias	The cardiac pacing therapy feature can temporarily control the heart rate by electrically stimulating the heart muscle to contract. This allows to maintain an adequate heart rate.
4	**ECG** Monitoring and recording of ECG and heart rate of adults, children and neonates with and without cardiovascular dysfunctions.	The electrocardiogram (ECG) is a non-invasive standard procedure for the examination of the heart. It allows to record the formation of electrical impulses and conduction of excitation in the heart and to monitor heart rhythm as well as heart rate. The bipolar limb leads according to Einthoven and the unipolar limb leads according to Goldberger can be recorded and displayed on the monitor using a 4-pole ECG monitoring cable. By combining the 4-pole cable with the 6-pole ECG diagnostic cable the 6 Wilson unipolar thoracic leads can be recorded in addition. The full 12-lead ECG can be displayed or printed on paper with the internal printer of device for comprehensive ECG diagnostics. ECG diagnostics can be supported by the Glasgow analysis software running on the device. The Basic version of the software computes a "representative cycle" from the diagnostic ECG and parameters that facilitate resting ECG interpretation. The full version computes additional parameters and is capable of proposing an ECG interpretation. The longterm ECG function allows to monitor the ECG lead II (or DE) over the whole course of the mission, either during the mission or afterwards, to evaluate the quantity of cardiac arrhythmias or to detect infrequent arrhythmias.

	Functional Cluster from Intended Purpose and Indication	Intended Clinical Benefit Related to Functional Cluster
		In addition, the optional ECGmax function allows to send ECG data via the telemetry system corpuls.mission LIVE (not part of the corpuls3) to a medical device software (VECGWEB by VectraCor) which calculates 10 additional ECG leads and the Cardiac Electrical Biomarker (CEB®) for myocardial ischaemia in order to provide a much more comprehensive picture of the heart.
5	**CPR feedback** • Cardiac arrest (resuscitation)	CPR feedback allows the user to monitor their chest compression performance during manual resuscitation. A sensor detects the current frequency and depth of chest compressions. Voice and text messages signal to the user whether the quality of chest compressions is within a predefined range or can be optimised. Chest compression rate can also be displayed as a trend over time.
6	**Oximetry / extended Oximetry** • Vital parameters to be monitored, deviating/ conspicuous/missing vital parameters	The monitoring and diagnostic oximetry measurement can be used to determine a patient's peripheral pulse rate (PR), perfusion index (Pi) and peripheral oxygen saturation (SpO2). The monitoring and diagnostic extended oximetry measurement can be used to determine a patient's carboxyhaemoglobin (SpCO), total haemoglobin (SpHb), and methaemoglobin levels (SpMet). The plethysmogram can be displayed as a curve. In addition, the respiration rate can be calculated from the oximetry measurement. Vital parameter measurements can also be displayed as trends over time.*
7	**Capnometry** • Vital parameters to be monitored, deviating/ conspicuous/missing vital parameters	The monitoring and diagnostic capnometry measurement can be used to determine the level of carbon dioxide (CO2) in a patient's exhaled air. Vital parameter measurements can also be displayed as trends over time. In addition, the respiration rate can be calculated from the capnometry measurement.*
8	**Temperature** • Vital parameters to be monitored, deviating/ conspicuous/missing vital parameters	The monitoring and diagnostic temperature measurement can be used to determine a patient's body temperature. Vital parameter measurements can also be displayed as trends over time.*
9	**NIBP** • Vital parameters to be monitored, deviating/ conspicuous/missing vital parameters	The monitoring and diagnostic non-invasive blood pressure (NIBP) measurement can be used to non-invasively determine a patient's blood pressure. Vital parameter measurements can also be displayed as trends over time.*
10	**IBP** • Vital parameters to be monitored, deviating/ conspicuous/missing vital parameters	The monitoring and diagnostic invasive blood pressure (IBP) measurement can be used to invasively determine a patient's blood pressure. Vital parameter measurements can also be displayed as trends over time.*

Table 3-3 Clinical benefit

* Vital parameter measurements provided by the device can be used for monitoring and diagnostic purposes by medical personnel. However, the device itself only provides the measured values and may trigger alarms if they exceed certain ranges but it does not make or suggest a diagnosis.

3.3.4 Summary of Safety and Clinical Performance (SSCP)

The Summary of Safety and Clinical Performance will be uploaded to the Eudamed database (https://ec.europa.eu/tools/eudamed/#/screen/home).

Product number	Basic-UDI-DI
04000	4260178350002 3J5
04000.1	4260178350002 3J5
04001	4260178350002 3J5
04001.1	4260178350002 3J5
04002	4260178350002 3J5
04002.1	4260178350002 3J5
04003	4260178350002 3J5
04003.1	4260178350002 3J5
04004	4260178350002 3J5
04004.1	4260178350002 3J5
04005	4260178350002 3J5
04005.1	4260178350002 3J5
04100	4260178350002 2J3
04200	4260178350001 7JA
04300	4260178350000 1HT
04301	4260178350000 1HT
04303	4260178350000 1HT
04304	4260178350000 1HT
04101	4260178350002 2J3
04101.1	4260178350002 2J3
04201	4260178350001 7JA
04201.1	4260178350001 7JA
04302	4260178350000 1HT
04305	4260178350000 1HT
04100.1	4260178350002 2J3
04200.1	4260178350001 7JA
04300.1	4260178350000 1HT
04303.1	4260178350000 1HT

3.3.5 Training Concept

To guarantee safe use of our devices on patients, GS relies on a comprehensive training concept which includes the following elements:

- E-Learning
- On site training

- Webinars and online trainings
- Further information, such as whitepapers

The training concept addresses different target audiences, such as multiplicators on the part of the manufacturer and the operator as well as users.

The description in this chapter shall be of general nature, as additional regulatory stipulations, e.g. for the qualification of medical device consultants have to be considered.

All training concepts will be adapted to the conditions of the customer, e.g. to specifications of device configuration or existing basic medical qualifications of the users.

Target group: Multiplicators on the part of the manufacturer

Multiplicators on the part of the manufacturer are e. g Clinical educators, product specialists, employees in sales or other persons who have the qualification of medical device consultant pursuant to German medical device legislation.

Objectives

Multiplicators on the part of the manufacturer are fully trained multiplicators on the part of the operator and users. Furthermore, they are able to

- advise customers and potential customers in matters of configuration and use of the product and to answer technical questions,
- recommend technical features and accessories,
- plan and implement trainings of users and multiplicators on the part of the customer/operator and
- prepare reports of malfunctions or incidents in such a way that these can be analysed and evaluated by the competent specialist departments and/or authorities.

Implementation concept

Further qualification is based on a full user training (see below). For the target audience of multiplicators on the part of the manufacturer each year several national and international on site trainings are offered which aim to impart the necessary competence to advise and train customers.

Besides the on-site trainings, training on special topics or new features are offered via webinars, online trainings and E-learning. With relevant changes in the hard- or software, attendance is mandatory to keep the competence record valid.

The obtained competence records have limited validity, which should ensure regular attendance at the offered advanced trainings.

Target audience: Multiplicators on the part of the customer/operator

Multiplicators on the part of the customer/operator are persons who perform the role of person responsible for the device commissioned by the operator pursuant to German medical device legislation.

Objectives

Multiplicators on the part of the customer/operator are full trained users. Furthermore, they

- know the configuration options of the device and can implement these according to the respective use cases,
- know the stipulations specific to the operator, such as maintenance- and inspection periods,
- can advise the user on device related issues,
- can plan and implement a user training according to the overall concept and the objectives and
- know the reporting channels and can analyse and describe malfunctions or incidents on the part of the operator and report these as intended.

Implementation concept

This target audience is always trained by the multiplicators on the part of the manufacturer in order to maintain corresponding quality standards. For the training of this target audience, the company GS offers standardised training materials and -concepts.

Also the qualification to be a multiplicator on the part of the customer/operator is based on a full user training and is comprised of all elements mentioned above.

Target audience: Users

Users are all persons who work with devices by GS on a patient. They are trained on principle by multiplicators on the part of the customer/operator.

Objectives

Users should

- know the essential features of the device,
- know the areas of application and pertaining limitations,
- be able to use the device safely on a patient,
- be able to perform reprocessing as intended after use in a mission,
- be able to perform a function check according to the user manual and
- be able to react adaequately to malfunctions.

Implementation concept

The training concept for users consists of a comprehensive E-learning course for theoretical preparation and an on-site training. In the latter, particular attention is given to exploring the functions relevant in day-to-day work.

Also for this target audience, GS offers standardised training materials and -concepts which are regularly updated.

The basic responsibility of qualifying the users lies with the operator/customer.

Taking into Account Country-Specific Requirements

Requirements on the training concepts implemented for the respective customers are defined by country-specific normative regulations as well.

In those cases, the company GS matches the central training concept individually to the conditions of the customer.

3.4 Alarm Management

The alarm management of the corpuls3 classifies all alarms into three different priorities, into physiological and technical alarms as well as into active and non-active alarms.

Priorities

High-priority alarms warn the user of immediate lethal or irreversible injuries of the patient or of malfunctions in the device. High-priority alarms cannot be interrupted by medium-priority- or low-priority alarms.

Medium-priority alarms alarms warn the user of immediate reversible injuries of the patient or of minor malfunctions in the device. Medium-priority alarms cannot be interrupted by low-priority alarms. High-priority alarms always take precedence over medium-priority- or low-priority alarms.

Low-priority alarms warn the user of minor injuries of the patient that may occur later or of minor limitations to the functionality of the device. High- and medium-priority alarms always take precedence over low-priority alarms.

Physiological and technical alarms

The physiological alarms are displayed if measured values exceed or fall below the pre-set limit values of the alarm. Technical alarms are displayed, if there is a malfunction in the device. If the corpuls3 is in AED- or manual defibrillation mode, the physiological alarms are not signalled.

If the alarming is disabled for an individual alarm, pertaining active alarms will be confirmed automatically.

Note

The physiological and technical alarms and the necessary troubleshooting measures are listed in chapter 11 Procedure in Case of Malfunctions, page 243.

Active and non-active alarms

Alarms are active, if the conditions that trigger the alarm are present. If alarms are confirmed by pressing the **Alarm** key, they are no longer indicated in the status-/alarm line. Some alarms, however, are still listed in the alarm history as non-active for information, even if the conditions that trigger the alarm have been remedied.

Alarm signals at monitoring unit and patient box

The corpuls3 issues visual alarm signals at the monitoring unit and at the patient box. If there is no connection between the monitoring unit and the patient box, acoustic alarm signals are issued at both modules. If there is a connection, acoustic alarms are issued only at the monitoring unit.

No alarm signals are issued at the defibrillator/pacer. Alarms of the defibrillator/pacer are signalled at the monitoring unit.

Covert mode

If the covert mode function is enabled, all signalisations of the device via speakers (start-up tone, speech messages, ready signal, key tones, alarms etc.) as well as the lightening up of the jog dial are completely disabled. It is recommended to use this function only for special surroundings and not for everyday missions. All alarms can still be viewed in the alarm history on the monitoring unit.



Warning

Loss of important information

Using the Covert Mode requires particular diligence and attention of the user, as otherwise it can lead to serious or lethal injuries of the patient. In this device mode, the user must have direct eye contact to the patient and the device at all times.

Clinic mode

The clinic mode is intended for corpuls3 devices that are used in a hospital. After this function has been enabled by the user OPERATOR, low priority alarms are repeated every 30 s until they are confirmed. High- and medium priority alarms are unchanged. All alarms can still be viewed in the alarm history on the monitoring unit.



Warning

Potential danger due to inappropriate alarm presettings in area of application!

If the user operates the device in an area of application other than the usual, the alarm settings may cause misunderstandings.

Adjust alarm settings.

Automatic System Supervision Function

The device is equipped with an automatic system supervision function that continuously detects and compensates for system deviations between internal modules.

If relevant inconsistencies are detected, that can't be resolved otherwise, the affected modules will restart automatically. This restores the intended overall system functionality and module synchronization.

During this automatic restart, some functions may be temporarily unavailable. This automatic restart is a part of the system architecture.

No action is required.

1. Wait until the restart is complete.

3.4.1 Alarm Signals at the Monitoring unit

Physiological and technical alarms are signalled at the monitoring unit via the status-/alarm line, the vital parameter field, the jog dial and by acoustic signals. The positions of the operation- and display elements are described in chapter 4.1 Operating- and screen elements, page 37.

Alarm signal in the status-/alarm line

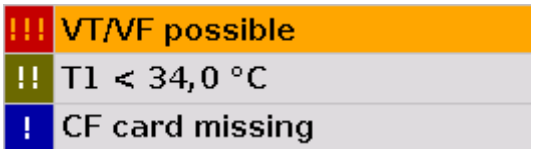

Fig. 3-16 Alarm messages in the alarm history

- The symbol ⚠ indicates an alarm.
- The number in brackets indicates the number of active alarms
- The number of exclamation marks indicates the priority of the alarm (!!! – high; !! – medium; ! – low)
- The colour of the status-/alarm line indicates the priority of the alarm (red – high; yellow – medium; blue – low)
- The alarm is displayed as a text message together with the pre-set limit value.

Pressing the **Alarm** key once opens the alarm history which lists the last 8 alarms. The individual alarms can be confirmed by pressing the **Alarm** key again. In this case, the most recent alarm message is deleted from the status-/alarm line of the monitoring unit and from the screen of the patient box.

Warning

Delayed recognition of critical patient status!

The alarm functions "Alarm OFF" and "Autolimits" can also be operated remotely with the corpuls.mobile **REMOTE** App. This may cause a delay in recognising critical patient status.

Keep direct eye contact to the patient at all times.

Sorting of alarm history

In the alarm history all active and non-active alarms are displayed that have not yet been confirmed; with the alarms being sorted top-down from active (top) to non-active (bottom). Within the active and non-active alarms, the alarms are sorted by priority and then in descending order by the time of their occurrence.

Note

The alarm history can contain up to 256 alarms. Preferably these should be confirmed as soon as possible. If more than 256 un-confirmed alarms accumulate, the oldest alarm is overwritten.

Note

Certain technical alarms are displayed in red type. These alarms cannot be deleted from the status-/alarm line and alarm history.

Alarm signal in parameter field displayed in inverted colours:



Fig. 3-17 Inverted parameter field

– This display appears only for physiological alarms.
– The parameter field can only be displayed in inverted colours when the display of this parameter field is configured.
– The parameter field remains in inverted colours for as long as the measured value falls below or exceeds the pre-set limit value or until the alarm for this measured value is disabled.
This applies regardless of whether the alarm message in the status-/alarm line has been confirmed by pressing the **Alarm** key or not.

Alarm signal via the jog dial:

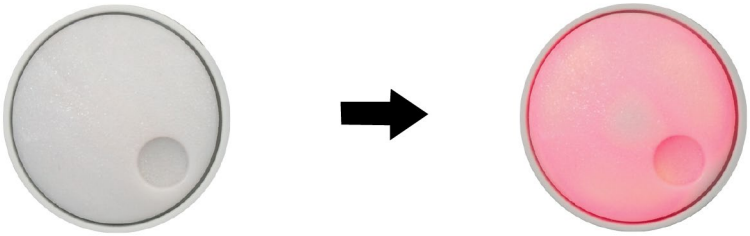

Fig. 3-18 Jog dial

1 Not illuminated
2 Illuminated to indicate an alarm

– The alarm with the currently highest priority is indicated by the colour blue, yellow or red (in older devices only red) as well as by the flashing speed of the jog dial.
– The priority of the alarm determines the flashing speed. The flashing speed increases with the priority.

The acoustic alarm sounds:

– The alarm with the highest priority is signalled acoustically.
– The type of sound helps the user to differentiate between low-, medium- and high-priority alarms.

Warning

Non-recognition of alarm conditions

Set the volume of the acoustic alarm so that it cannot fail to be heard in loud environments.

Minimal volume

The minimal volume can be configured by the user OPERATOR to prevent that alarms are not heard in loud surroundings. The user cannot set the volume lower than the minimal volume defined by the user OPERATOR.

Alarm suspension

If the **Alarm** key is held down for more than 1 s, physiological alarms can be suspended briefly or, depending on the configuration set by the operator, also permanently. Prerequisite is that this has been configured accordingly in the settings (see chapter 7.4.6 Alarm Configuration (Persons Responsible for the Device), page 182).
If the alarm suspension has been activated, it can also be deactivated again by pressing the **Alarm** key for more than 3 s.

Note

If for one parameter the alarm has been disabled by selecting "Alarm OFF" and the parameter field is no longer displayed, the alarm will automatically be re-enabled.

Defibrillation mode

Only technical alarms are displayed in defibrillation mode. Physiological alarm limits are not monitored.

No physiological alarm events are saved in defibrillation mode.

Warning

Loss of important information

The patient must not be left unattended when defibrillation mode is selected.

Configuration of alarms

Manual and automatic configuration as well as all further settings (saving, volume, etc.) with reference to the alarm function of the monitoring unit can be found in chapter 7.3 Alarm Configuration, page 172.

Situation after switching on

After switching on, the settings entered by the person responsible for the device apply. Differing alarm settings are only saved permanently if the user has the appropriate authorisation.

Loss of important information

Night vision goggle (NVG/NVIS)-compatible monitoring units differ from the above description as follows:

Warning

- The illumination of the jog dial for signalling an alarm is not red but cyan (light-blue).
- The maximum brightness of the illumination of the jog dial is only 5% of the regular configuration.
- The signalling of an alarm via the jog dial is not visible in daylight and difficult to see in the twilight.
- The representation of colours on the screen differs. Due to this, signal colours may not be recognised as such.

3.4.2 Alarm Signals at the Patient box

Physiological and technical alarms are signalled on the patient box in various ways:

Alarm message on the patient box screen:

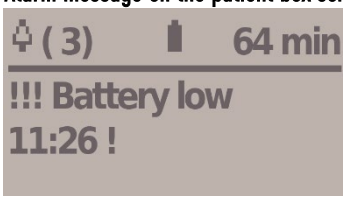

Fig. 3-19 Alarm message on the patient box screen

- The symbol indicates an alarm.
- The number in brackets indicates the number of active alarms (here 3 alarms).
- The number of exclamation marks indicates the priority of the alarm (!!! – high; !! – medium; ! – low)
- The alarm is displayed as a text message together with the pre-set limit value and the timestamp of the alarm.

The individual alarms can be confirmed by pressing the **Multifunction** key once. If a radio connection to the monitoring unit exists, the most recent alarm message is deleted from the status-/alarm line and alarm history of the monitoring unit and from the screen of the patient box.

The acoustic alarm sounds:

Acoustic alarms are only signalled, if no radio connection to the monitoring unit exists.
If a connection to the monitoring unit exists, the acoustic alarm only sounds on the monitoring unit; the alarm on the patient box is suspended.

Configuration of alarms

The alarm limits can be modified on the monitoring unit. Manual and automatic configuration in addition to further settings pertaining to the alarm function can be found in chapter 7.3 Alarm Configuration, page 172.

Situation after switching on

After switching on, at first the settings entered by the person responsible for the device apply. Differing alarm settings are only saved permanently if the user has the appropriate authorisation.

3.5 Energy Management

Influence of the modular structure

Energy management is of paramount importance owing to the modular structure of the corpuls3.

The corpuls3 and the individual modules can be operated on battery alone or on 12 V DC power supply or via a separate charger (only 230 V AC).

Caution

Risk of delayed therapy

Batteries have to be inserted in the individual modules at all times.

3.5.1 Battery operation

Identical lithium-ion batteries

The three modules of corpuls3 each have their own lithium-ion battery. The batteries are identical and have an integrated microchip which records the history of use.

Each of these batteries can be replaced manually and without use of tools. Exchanging the batteries for one another within the corpuls3 is also possible. Information on replacing the batteries can be found in chapter 10.6 Replace battery, page 236.

When the modules of the corpuls3 are connected mechanically (compact device or semi-modular use), the energy is drawn from the battery with the currently highest state of charge. If the state of charge is identical in all batteries, the corpuls3 accesses all available batteries equally.

Empty or faulty batteries

If only a low level of charge remains in the battery of one module, it is possible to access the energy reserves of the other batteries by connecting this module to one or both other modules.

Note

If the state of charge of a battery is less than 20 %, an alarm message for the respective module is triggered.

Note

To guarantee a sufficient charge, the corpuls3 has to be inserted into the charging bracket or connected to the external charger.

One battery with adequate charge is sufficient to operate the device reliably as compact device.

Energy exchange or mutual charging between the batteries does not occur.

The corpuls3 as well as the individual modules can be operated on battery, directly on 12 V DC or via a separate charger (230 V AC).

Note

The corpuls3 is only intended for use with all three batteries inserted.

Remaining running time display

To be able to offer the user the maximum possible safety, the corpuls3 calculates the remaining running time and indicates this in minutes. In calculating the remaining running time, the device takes the current energy consumption into account.

The remaining operating time is displayed in the status-/alarm line of the monitoring unit (Fig. 3-20).

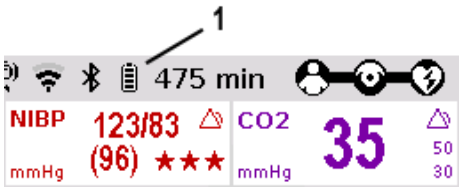

Fig. 3-20 Remaining running time of the corpuls3 in the current operating status

1 Battery symbol and remaining running time in minutes

In case of modular use of the patient box, the remaining running time of the patient box, taking into account the current energy consumption, is displayed (Fig. 3-21).

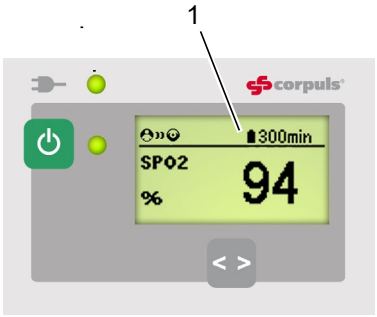

Fig. 3-21 Remaining running time of the patient box

1 Battery symbol and remaining running time in minutes

Alternatively, the state of charge of the batteries in percent can be viewed in the system info. Select in the main menu "System" ► "Info".

Battery charging

Since each module has a charge controller, it can be charged individually and independently from the other modules.

Furthermore, in compact or semi-modular use, the system can also be charged by only one magnetic contact. In this case, the charging time is independent of whether only one or several modules are simultaneously charged by an external power supply.

During charging, the corpuls3 system can be operated.

Battery maintenance

Special maintenance of the batteries is not required. Nevertheless, charging and/or operating under extreme temperatures should be avoided as far as possible. This and extreme temperature fluctuations limit the service life of lithium-ion batteries. It is therefore recommended to charge the batteries within a temperature range from 12°C to 40°C. Periodic replacement of the batteries after 3 years is recommended.

Operating time

Compact device:	approx. 9-13 h
Patient box:	approx. 4-6 h
Monitoring unit:	4 hours (at 70% background illumination)
Defibrillator/Pacer:	Up to 200 shocks at 200 J

Charging time

Battery 5.7 Ah (P/N 04120.23 and 04120.823)

From 0 to 80 %	approx. 1.5 hours
From 0 to 90 %	approx. 2 hours
From 0 to 100 %	approx. 3 hours

Note

The batteries have an internal protection which could delay or interrupt the charging process at ambient temperatures of higher than 50°C.

3.5.2 Mains operation

Operation with 12 V DC

The compact device and each individual module can be operated directly with 12 V DC.

Use of a mains charger

In combination with a multi-range mains charger, the compact device and the individual modules can also be connected to and operated with voltage sources of 100 V to 240 V AC. Operation with the mains charger on a source of alternating current functions regardless of whether no batteries, empty batteries or faulty batteries are used.

Note

The corpuls3 and the AC converter form a medical electric system.

State of charge display

The current state of charge of the batteries is displayed on the status-/alarm line of the monitoring unit (Fig. 3-22).

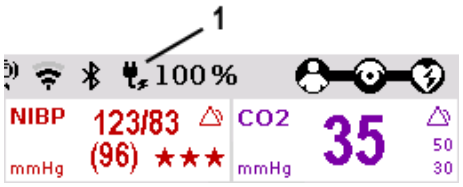

Fig. 3-22 Display of the current state of charge of the batteries on mains operation

1 Symbol for mains connection and state of charge of the batteries in percent

Charging brackets

The voltage can also be supplied by the three available charging brackets:

- Compact device bracket 12 V DC (P/N 04400)
- Monitoring unit wall mounting bracket 12 V DC (P/N 04401)
- Patient box bracket 12 V DC (P/N 04402)

These brackets can also be connected to voltages sources other than 12 V DC via DC/DC or AC/DC converters.

Charging during operation

If batteries are present in the device, they will be charged during use.

Magnetic contact field

Each of the three modules has its own magnetic contact field for power supply. The flow of energy only begins when the corresponding magnetic mating component (magnetic clip or bracket supplied with voltage) is applied in the correct position (observe groove). The magnetic clip releases itself automatically if the pulling force becomes excessive and so prevents damage to the connector and the cable.

The connection (item 1, Fig. 3-23) on the defibrillator/pacer is used for power supply of

- the entire device in compact use,
- the defibrillator/pacer and the monitoring unit in semi-modular use or
- the defibrillator/pacer in modular use.

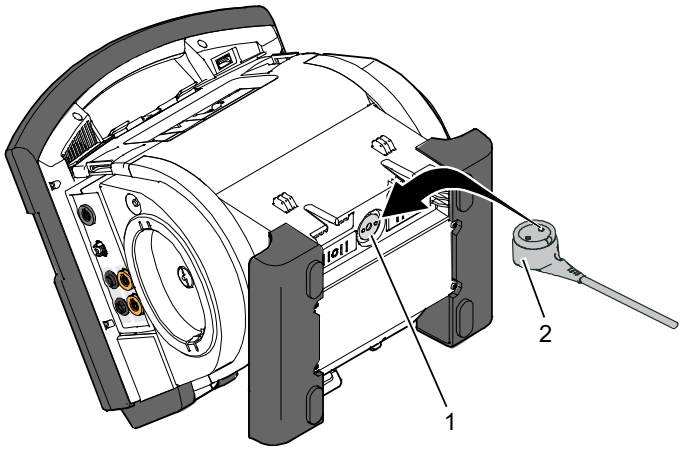

Fig. 3-23 Compact device, power supply (illustration may differ)

1 Power supply connection

2 Magnetic clip

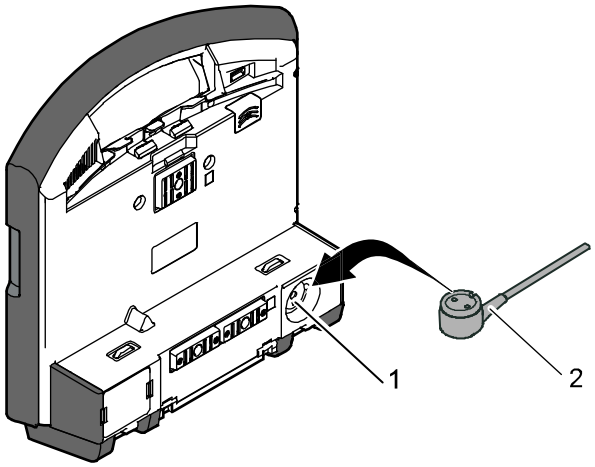

Fig. 3-24 Monitoring unit, power supply

1 Power supply connection
2 Magnetic clip

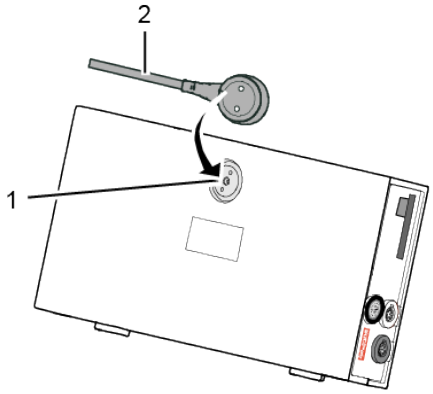

Fig. 3-25 Patient box, power supply (illustration may differ)

1 Power supply connection
2 Magnetic clip

4 General Operating Instructions

4.1 Operating- and screen elements

The corpuls3T, available as of version 4.0 allows, in addition to the jog dial, operation via touchscreen (see chapter 4.1.3 Operation via Touchscreen, page 43).

4.1.1 Operating Elements and LEDs on the Monitoring Unit

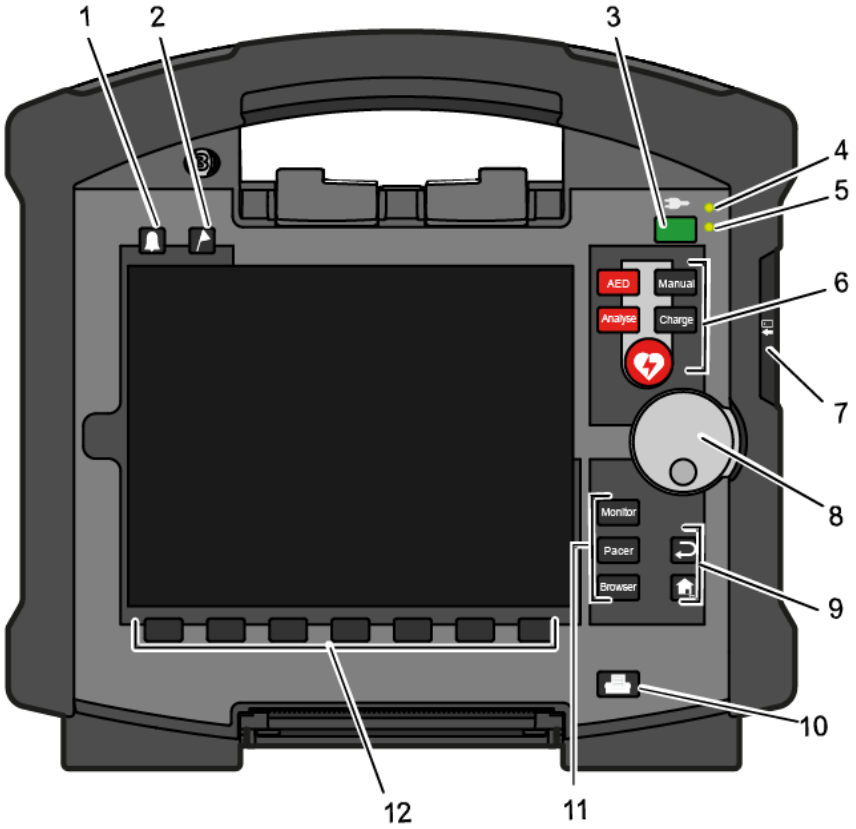

Fig. 4-1 Monitoring unit, operating elements and LEDs

1 Alarm key
2 Event key
3 On/Off key
4 LED Power supply/State of charge
5 Operating status LED
6 Defibrillation mode function keys
7 Insurance card reader (option)
8 Jog dial and alarm light
9 Function keys for navigation
10 Print key
11 Operating mode keys
12 Softkeys

On/Off key



The following modules are switched on or off by pressing the **On/Off** key on the monitoring unit:

- all modules during use as a compact device;
- the monitoring unit and all the modules connected mechanically to the monitoring unit during semi-modular use;

During modular use only the monitoring unit is switched on with the **On/Off** key, but all modules are switched off with it. Chapter 4.2 Switching On and Off, page 48 contains further information on switching on and off.

Status LEDs

The status LEDs of the monitoring unit indicate the power supply or the state of charge of the batteries in addition to the operating status of the device:

LED	power supply/ state of charge (item 4)	green	- Battery is fully charged - Device is connected to the mains
		orange	- Battery is being charged
LED	operating status (item 5)	green	- Device is switched on

Function keys, defibrillation mode

The defibrillation and cardioversion functions are called up by pressing the defibrillation mode function keys (item 6) (see also chapter 5 Operation – Therapy, page 66).

AED	The red **AED** key selects the operating mode "automated external defibrillation". The corpuls3 can be switched on by pressing the **AED** key. In this case the operating mode is immediately available.
Analyse	The red **Analyse** key selects the operating mode "automated external defibrillation" or starts the ECG analysis.
Manual or Energy	The grey **Manual** key or the **Energy** key selects the operating mode "manual defibrillation". The corpuls3 can be switched on by pressing the **Manual** key. In this case the operating mode is immediately available.
Charge or Charge	The **Charge** key selects the operating mode "manual defibrillation" or initiates the charging process.
or Shock	The **Shock** key triggers a defibrillation shock in AED- or manual mode. It is positioned centered, as it is valid for both modes.

Table 4-1 Keyboard layout defibrillation keys (modifications possible)

Jog dial

With the jog dial, it is possible to:

- navigate on the display;
- open a parameter context menu or curve context menu pertaining to a parameter or curve and adjust settings (see chapter 4.3.2 Parameter Context Menu and Curve Context Menu, page 52);
- open the main menu of the device and adjust settings (see chapter 4.3.3 Main Menu, page 53);
- adjust numerical values in defibrillation mode and pacer mode;
- adjust settings in the configuration dialogue (see chapter 4.3.4 Configuration dialogue, page 54).

Operating mode keys

The different operating modes are selected by pressing the following keys (Fig. 4-1, item 11):

Monitor — The **Monitor** key selects the monitoring functions (monitoring mode)

Pacer — The **Pacer** key switches to pacer mode

Browser — The **Browser** key starts printing of the log. If the **Browser** key is held down for more than 1 s, the mission browser opens.

Back and Home function keys

The function keys **Back** and **Home** (Fig. 4-1, item 9) are used to control the device:



The **Back** key returns to the next menu level up or undoes the last selection.



1. The **Home** key switches to the basic status of the respective mode and leaves menus completely by skipping several levels.
2. By pressing the **Home** key, the lock of keyboard and touchscreen can also be engaged:

Locking and unlocking the keyboard and touchscreen

a) Hold down the **Home** key and confirm the confirmation prompt "`Lock input device?`" by briefly pressing the softkey [`All`] or [`Touch`]. The message "`Touch display locked`" or "`All locked`" appears.

b) To unlock, press softkey [`Unlock`].

Note The softkey [`Touch`] only locks the touchscreen, the softkey [`All`] locks all keys, softkeys and the touchscreen. With pressing the softkey [`Unlock`], however, everything is unlocked, even if only the touchscreen was locked before.

Note If a key is pressed while input lock is active, the message text "Input device locked - Hold down HOME `key to unlock`" appears. Deactivate keyboard lock immediately to avoid delaying necessary operating steps on the device.

Note The input lock does not apply to the red or green button at the shock paddles. A discharge of energy via shock paddles is possible despite an activated input lock.

Print key

Pressing the **Print** key (Fig. 4-1, item 10) starts the real-time printout of the curves. Pressing the **Print** key again interrupts every running print job (log, D-ECG, real-time printing).

The time span after which the printer stops automatically can be pre-set in the printer configuration. For further information on printout configuration see chapter 7.1.3 Printer settings, page 160.

Softkeys



The softkeys (Fig. 4-1, item 12) are assigned different functions, depending on the current operating mode or selected dialogue. The current function is displayed in the softkey line.

Alarm key



By pressing the **Alarm** key (Fig. 4-1, item 1), the alarm history of all physiological and technical alarms is called up. All the alarms which have occurred appear in this list with their time of occurrence.

1. Press the **Alarm** key to retrieve the alarm history.
2. Press the **Alarm** key to confirm the alarm.
3. Repeat step 2 until all alarms have been confirmed.

Note Severe technical alarms reported by the alarm system cannot be deleted from the alarm history. Those are marked in red type.



Physiological alarms can be suspended for a selected period of time (up to 120 s or permanently) (see chapter 7.4.6, Alarm Configuration (Persons Responsible for the Device), page 182) by holding down the **Alarm** key for approx. 1 s. Technical alarms cannot be suspended.

Note For the alarm suspension, a maximum period of 60 seconds is recommended (see also chapter 7.4.6 Alarm Configuration (Persons Responsible for the Device), page 182).

Event key



If the **Event** key (Fig. 4-1, item 2) is pressed briefly, a time stamp is saved which marks the current ECG data and parameter values. Based on this marking, this data can subsequently be located in the data memory, viewed and assessed. The message `Event recorded` appears in the message line.

If the **Event** key is held for more than 1 s, the event list with pre-configured events appears (see chapter 8.2 Event key, page 196).

4.1.2 Basic Structure of the Screen Pages on the Monitoring Unit

The screen has the following structure:

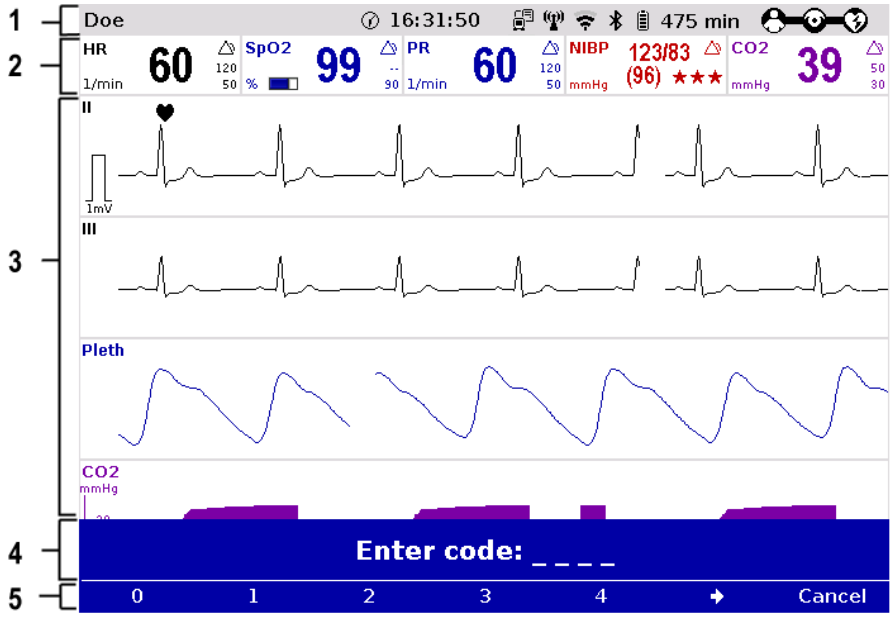

Fig. 4-2 Monitoring unit, example of basic structure of the screen pages

1 Status-/alarm line
2 Parameter area
3 Curve and display area
4 Message line
5 Softkey line

Note The colours of the parameters and curves in the illustrations of this user manual may differ from the actual display.

Status-/alarm line The following data are displayed in the status-/alarm line (Fig. 4-2, item 1):

- Physiological and technical alarms
- Name of the patient (if not available: Patient ID or Case number)
- Time and deployment time alternating every 5 seconds
- Symbols for telemetry-functions
- State of charge of the batteries on mains operation
- Remaining running time of the device on battery operation
- Connection status of the modules

Connection status	Meaning
	All three components are connected mechanically and communicate via the infrared optical interface.

Connection status	Meaning
	Monitoring unit and defibrillator/ pacer are connected mechanically and communicate via the infrared optical interface. The patient box is disconnected mechanically, but there is a radio connection with the patient box.
	Monitoring unit and patient box are connected mechanically and communicate via the infrared optical interface. The defibrillator/ pacer is disconnected mechanically, but there is a radio connection with the defibrillator/ pacer.
	All components have a radio connection.
	The defibrillator/ pacer was not switched on together with the corpuls3 and therefore is not available currently.
	All three components are connected mechanically and communicate via the infrared optical interface. A radio connection is not possible, because all three components are connected with an ad-hoc-connection.
	Monitoring unit and patient box are connected mechanically and communicate via the infrared optical interface. A radio connection is not possible, because both components are connected with an ad-hoc-connection. The defibrillator/ pacer is disconnected; there is no radio connection to the defibrillator/ pacer.
	Monitoring unit and defibrillator/ pacer are connected mechanically and communicate via the infrared optical interface. A radio connection is not possible, because both components are connected with an ad-hoc-connection. The patient box is disconnected; there is no radio connection to the patient box.

Table 4-2 Module connection status

The wave symbol or the bar symbol flashes for as long as the device is attempting to establish a connection, but has not yet been able to do so.

Note If the radio connection is interrupted, the modules have to be connected to each other mechanically. The corpuls3 switches automatically from radio connection to infrared connection in this case.

Parameter area The measured parameters and the configured alarm limits are displayed in the parameter area (Fig. 4-2, item 2) of the display.

Curve and display area Up to 6 curves of measured values of monitoring functions can be displayed in the curve and display area (Fig. 4-2, item 3) of the display.

If the device is in defibrillation- or pacer mode, the parameters of the respective operating mode are displayed in the bottom half of the display.

In case of a diagnostic ECG, all 12 leads are displayed simultaneously as curves.

Message line In the message line (Fig. 4-2, item 4) of the screen, additional interactions with the user interface are displayed, e. g. to enter the PIN code for the OPERATOR user level or to enter patient data.

Softkey line The current function assignment of the softkeys is displayed in the softkey line (Fig. 4-2, item 5).

View configuration Further options of the structure of the screen page can be configured (see chapter 7.1.2 Configuration, page 156).

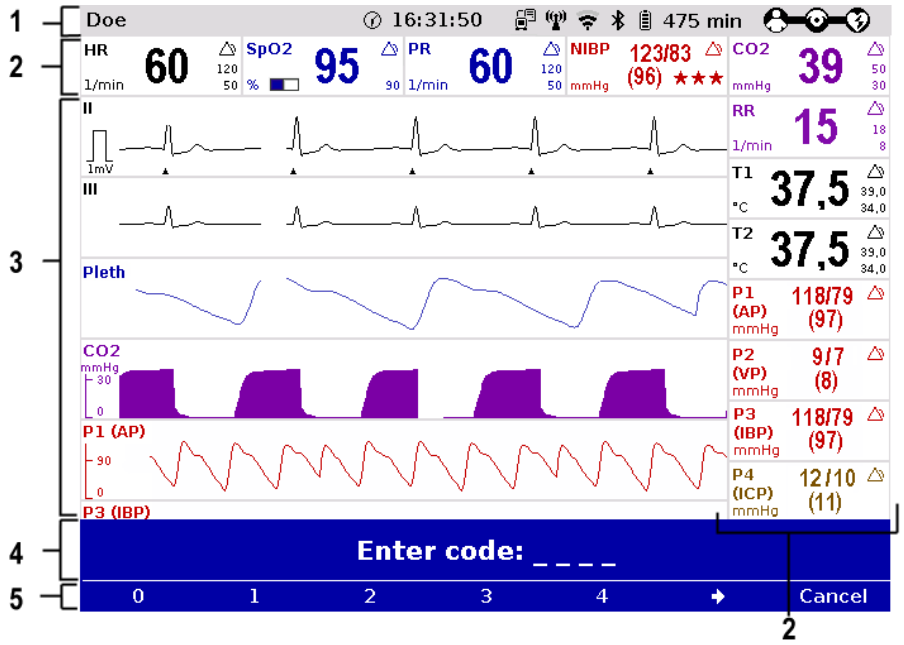

Fig. 4-3 Screen page, example with horizontal and vertical parameter area

1 Status-/alarm line
2 Parameter area
3 Curve and display area
4 Message line
5 Softkey line

Inverting screen colours

Monitor

If necessary under particular lighting conditions, the screen can be displayed in inverted video. If the **Monitor** key is held down for more than 1 seconds, the screen display is inverted (see also chapter 7.1.1 General System Settings (User DEFAULT), page 154).

Furthermore, it is possible to invert the screen via the system settings:

1. Select in the main menu "System" ► "Settings".The configuration dialogue opens.
2. In the configuration group "Display" select the configuration field "Colours" ► "inverted".
3. Press softkey [OK].

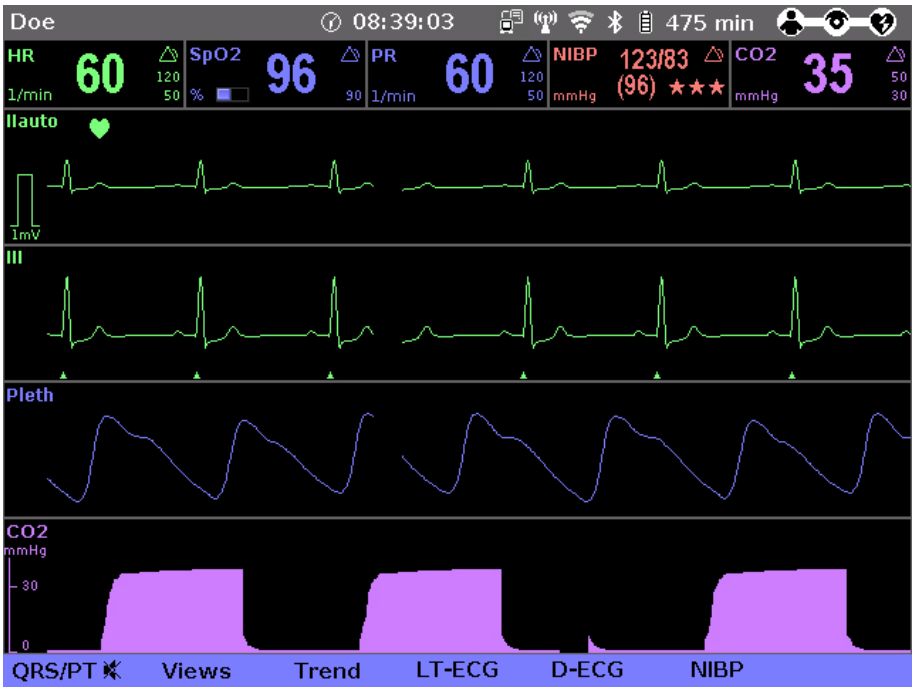

Fig. 4-4 Inverted video display of the screen (colours may differ)

Screen Night vision goggle (NVG/NVIS)-compatibility

The corpuls3 is optionally available as a night vision goggle (NVG/NVIS)-compatible variant (see chapter 10.8 Approved Accessories, Spare Parts and Consumables, page 242). This variant emits less light than normally so that in-flight or military purpose operation of the corpuls3 when using night vision goggles is possible.

For this, the display of the screen of night vision goggle (NVG/NVIS)-compatible devices can be inverted specifically for use with night vision goggles via the system settings (see chapter 7.1.1 General System Settings (User DEFAULT), page 154):

1. Select in the main menu "System" ► "Settings".The configuration dialogue opens.
2. In the configuration group "Display" select the configuration field "Colours" ► "night".
3. Press softkey [OK].

4.1.3 Operation via Touchscreen (only corpuls3T)

The corpuls3T, available as of version 4.0 allows, in addition to the jog dial, operation via touchscreen.

The touchscreen is divided into active areas. Tapping on an active area opens a pertaining menu, tapping on a neutral area closes it:

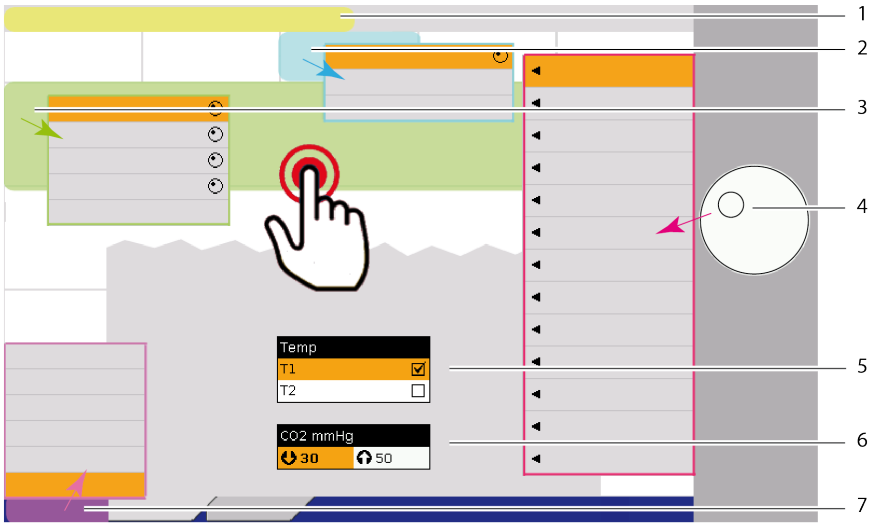

Fig. 4-5 Touchscreen, active areas are highlighted in colour

1 Active area Alarm history, yellow
2 Active area Parameter context menu, blue
3 Active area Curve context menu, green
4 Main menu, red, can only be opened with the jog dial
5 Checkbox in configuration dialogue
6 Multiple options in configuration dialogue, activated
7 Active area Softkey context menu, pink

Alarm history The alarm history can be opened by tapping (corresponds to the first pressing of the **Alarm** key), if an alarm exists. However, alarms can be only confirmed with the jog dial or by pressing the **Alarm** key.

Note For the **Event** key there is no active area, but after holding down the **Event** key, a pre-configured event can be selected by tapping (see chapter 8.2 Event key, page 196).

Context menus The options in the curve-, parameter and softkey context menus can be selected by tapping. Binary options (e.g. Alarm ON/Alarm OFF) are confirmed directly by tapping. The symbol for the jog dial indicates that there are multiple values that can be scrolled through with the jog dial and confirmed by pressing the jog dial (see also chapter 4.3.2 Parameter Context Menu and Curve Context Menu, page 52).

Main Menu The main menu can only be opened with the jog dial, in the corpuls3T as well as in the previous device. The corresponding submenus, however, can be opened by tapping.

Configuration dialogue The options in the configuration dialogues can be selected by tapping. Checkboxes are selected or deselected directly by tapping. For multiple options (e.g. number values) the bold type indicates that there are multiple values that can be scrolled through with the jog dial and confirmed by pressing the jog dial.

Softkeys The softkeys can be selected by tapping, but for entering e.g. names the characters/number still have to be scrolled through and selected with the jog dial. For information on the softkey context menu see also chapter 4.3.1 Softkey Context Menu, page 51.

Caution

Impairment or malfunction due to wetness/contamination!

When operating the touchscreen with wet hands or with the presence of (salt)water, blood or other contaminations, the touchscreen may malfunction or not function at all (ghost touches).

Operate the touchscreen with dry hands. If necessary, lock and wipe off the touchscreen.

Onscreen keyboard To facilitate entering text, the corpuls3/corpuls3T has as of version 4.1 an onscreen keyboard which can be operated by tapping on the screen or with the jog dial. The entered text appears in a line above the keyboard. The jog dial no longer scrolls through the letters in alphabetical order, but line by line as shown on the keyboard. The softkey [⬆] allows switching between lower case and upper case letters.

Note To lock the touchscreen, hold down the **Home** key and confirm the confirmation prompt "`Lock input device?`" by pressing the softkey [`All`] or [`Touch`].

Note If the touchscreen function is not available, the user may operate the device via jog dial and keys at any time.

4.1.4 Patient box screen

The patient data are displayed on a separate screen during modular use. The screen has the following structure:

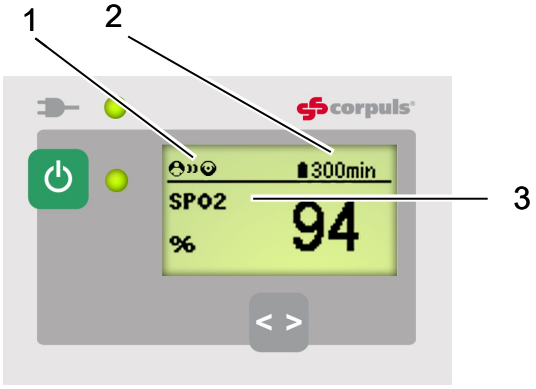

Fig. 4-6 Patient box, displays on the screen (illustration may differ)

1 Connection status with the monitoring unit
2 Remaining running time of the patient box on battery operation
3 Display of a selected vital parameter

For the status of the network connection (item 1) of the patient box, the following conditions exist:

Connection status	Meaning
	The patient box has a connection with the monitoring unit
	The patient box does **not** have a connection with the monitoring unit

Table 4-3 Module connection status

The remaining running time is not displayed if the patient box is operated on an external mains charger.

Note The screen of the patient box may appear darker in night vision goggle (NVG/NVIS)-compatible devices.

4.1.5 Control Keys and LEDs on the Patient Box

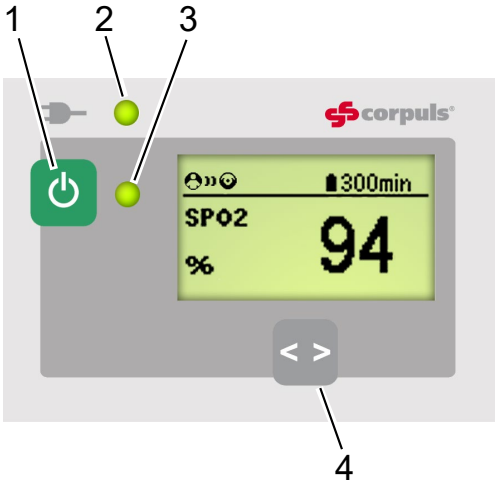

Fig. 4-7 Patient box, control keys and LEDs (illustration may differ)

1 On/Off key
2 LED Power supply/State of charge
3 Multifunction LED operating status/HR/alarm
4 Multifunction key

On/Off key

The patient box is switched on or off during modular use by pressing the **On/Off** key (item 1).

LED power supply/ state of charge

The state of charge LED (item 2) indicates the power supply or the state of charge of the battery:

LED	power supply/ state of charge	green	- Battery is fully charged - Device is connected to the mains
		orange	- Battery is being charged

Multifunction LED

The multifunction LED (item 3) flashes in step with the heart rate when ECG electrodes or the SpO_2 sensor are connected. If no electrodes or no SpO_2 sensor are connected, it indicates the operating status of the patient box. Furthermore, physiological and technical alarms are indicated by flashing up.

Multifunction key

By pressing the **multifunction** key (item 4), the next parameter being currently measured is displayed.

If alarms are displayed on the screen of the patient box, they can be confirmed by pressing the **multifunction** key.

4.1.6 Control Key and LEDs on the Defibrillator/Pacer

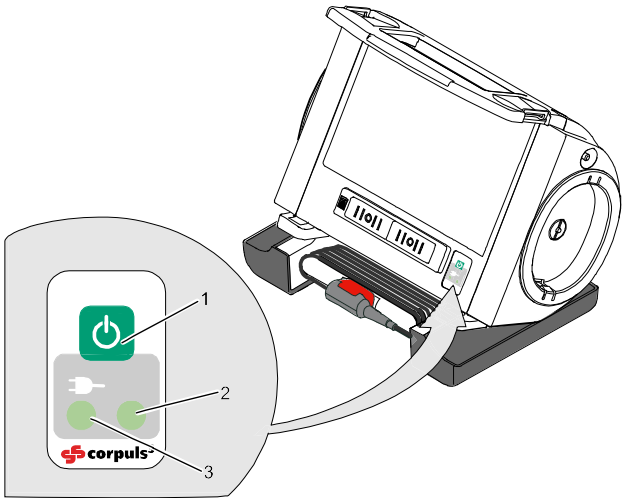

Fig. 4-8 Defibrillator, control key and status LEDs

1 **On/Off** key
2 Operating status LED
3 LED Power supply/State of charge

On/Off key

By pressing the **On/Off** key (item 1), the defibrillator is switched on or off during modular use.

Status LEDs on defibrillator

The status LEDs of the defibrillator/pacer module indicate the power supply or state of charge of the battery as well as the operating status of the device:

LED	power supply/ state of charge (item 3)	green	- Battery is fully charged - Device is connected to the mains
		orange	- Battery is being charged
LED	operating status (item 2)	green	- Device is switched on

4.1.7 Control Key and LEDs on the Defibrillator/Pacer SLIM

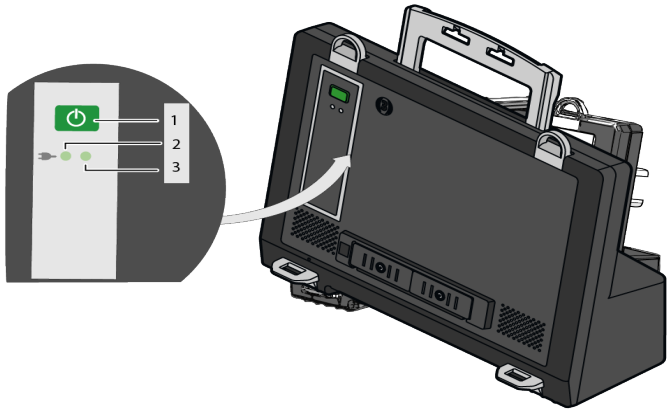

Fig. 4-9 Defibrillator SLIM, control key and status LEDs

1 **On/Off** key
2 LED Power supply/State of charge
3 Operating status LED

On/Off key

By pressing the **On/Off** key (item 1), the defibrillator is switched on or off during modular use.

Status LEDs on defibrillator

The status LEDs of the defibrillator/pacer module indicate the power supply or state of charge of the battery as well as the operating status of the device:

LED	power supply/ state of charge (item 3)	green	- Battery is fully charged - Device is connected to the mains
		orange	- Battery is being charged
LED	operating status (item 2)	green	- Device is switched on

4.2 Switching On and Off

4.2.1 Switching on

Compact device



Press the **On/Off** key on the monitoring unit.
All modules are switched on.

Switching on in defibrillation mode

Press the AED or Manual key on the monitoring unit.
The corpuls3 either starts in AED mode or in manual defibrillation mode, respectively.

Semi modular use



1. Press the **On/Off** key on the monitoring unit.
   The monitoring unit and the module connected mechanically to it are switched on.
2. Press the **On/Off** key on the module which is not connected mechanically.
   This module is switched on.

Modular use



Press the **On/Off** key on all individual modules.
The modules are switched on independently.

Connecting modules

When a switched-off module is connected mechanically to a switched-on module, it switches on automatically.

Note

When a (new) battery is inserted in a module, this module can switch on automatically.

Note

A certain amount of time is required to achieve operational status after switching on. It is therefore recommended to switch on the corpuls3 as soon as possible.



Warning

Risk of System failure

If the alarm message "ß-SW-NOT FOR PAT. USE" appears after the device is switched on, the software of one or all modules is a betaversion.

Using this version on a patient is prohibited. Contact your authorised sales and service partner.



Warning

Risk of System failure

If the alarm message "ONLY FOR TEST" appears after the device is switched on, the software of one or all modules is a test version.

Using this version on a patient is prohibited. Contact your authorised sales and service partner.

4.2.2 Switching off

Compact device



1. Press the **On/Off** key on the monitoring unit.
   All modules are switched off if the softkey [OK] is pressed after the confirmation prompt appears.



Fig. 4-10 Confirmation prompt before switching off

(Semi) modular use



Press the **On/Off** key on the monitoring unit. All modules connected with the Monitoring unit mechanically or by radio are switched off if the softkey [OK] is pressed after the confirmation prompt appears.

Defibrillator/patient box



The defibrillator and patient box can be switched off independently without having an influence on the remaining modules by pressing the **On/Off** key. To do so, hold down the **On/Off** key on the defibrillator or patient box for 3 seconds.

Cancelling switch-off

The switch-off process of the monitoring unit and the connected modules can be cancelled by pressing the softkey [Cancel]. This confirmation prompt disappears by itself if no action is taken within approx. 10 seconds and the monitoring unit and the connected modules remain switched on. To confirm the switching off process, press the softkey [OK].

Upload mode

If the option "Mission upload" is enabled and configured, pressing the softkey [OK] starts the upload of missions recorded on the CF card to the configured server, before the device is switched off.



Fig. 4-11 Upload screen

If the upload should be skipped and the corpuls3 should shut down immediately, press the softkey [Now].

Switching off in pacer mode

1. Press the **On/Off** key as described above.
   The confirmation prompt "`Switch off pacer? - Power off?`" appears.

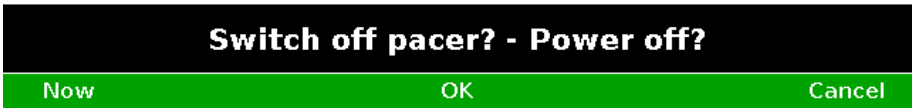

Fig. 4-12 Switching off with pacer active

2. If the unit is to be switched off even though the pacer is active, press softkey [OK].
   If the unit is not to be switched off, press softkey [Cancel].

Switching off in case of system crash

In case of a system crash of one of the modules or of the compact device, the device can be switched off with the **On/Off** key. For this, the **On/Off** key at the monitoring unit (or at the individual modules) has to be held down (at least for 8 seconds) until the module switches off. Subsequently, the module can be restarted with the **On/Off** key. It is not necessary to remove the battery.

Warnings on switching off

If no connection with the patient box and/or defibrillator/pacer exists at the time of switching off the monitoring unit or if a timing problem exists between the modules, this is indicated to the user by the message "Check modules":

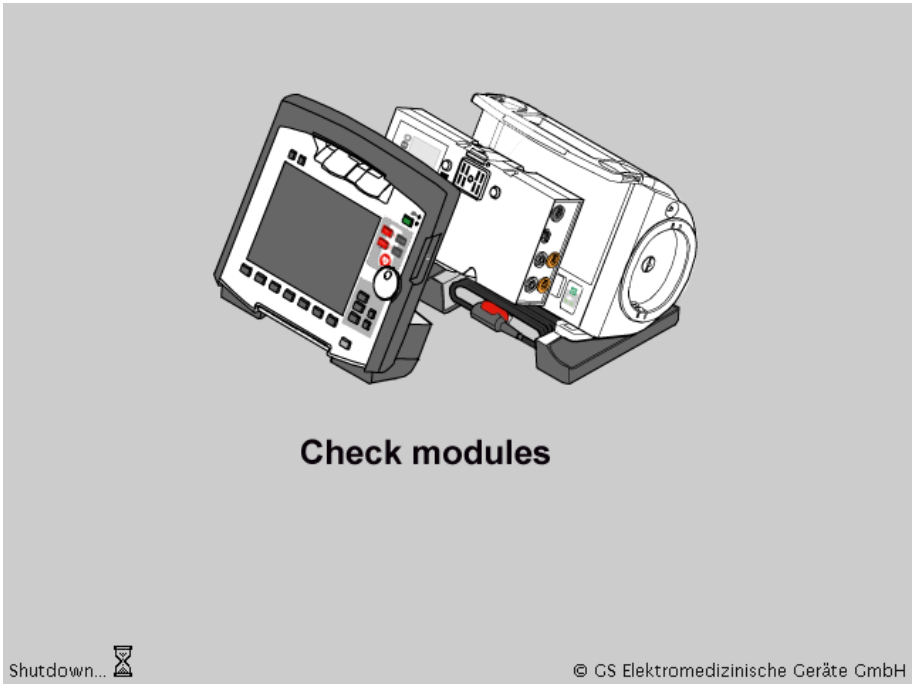

Fig. 4-13 Warning on switching off

In this case, separate the modules and check whether all modules have been shut down. If this is not the case, switch off the modules which have not been switched off by pressing the respective **On/Off** key.

4.3 Menu Control



The menus are controlled with the jog dial, softkeys and the function keys **Back** and **Home**.

There are four different menu types:

- Softkey Context Menu
- Parameter context menu or curve context menu
- Main menu of the device
- Configuration dialogue

4.3.1 Softkey Context Menu

The softkey context menu allows fast access to menu items that are relevant for the corresponding softkey. Four softkey context menus are available:

- QRS (monitoring mode): activation of the QRS-/pulse tone and fast access to volume control. The volume control always starts with the position "Off" and can be advanced position by position by pressing the corresponding softkey several times.
- Views (monitoring mode): fast access to a pre-configured views.
- Trend (monitoring mode): Trend curves of the vital parameters.
- Metronome (only in defibrillation mode): fast access to mode selection

Softkeys [QRS] and [Views]

To open the softkey context menu, press the softkey [QRS] or [Views].

For the softkey context menu [QRS], the volume control always starts with the position "Off" and can be advanced position by position by pressing the corresponding softkey several times. In the softkey context menu [Views], a pre-configured view can be selected

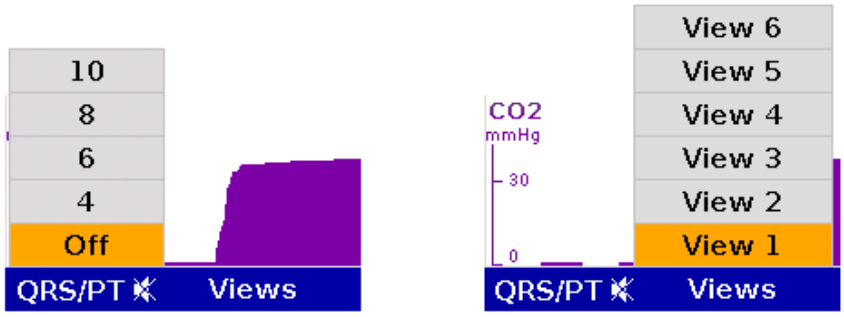

Fig. 4-14 Example for softkey context menu

Softkey [Trend]

The softkey [Trend] opens a softkey context menu. The user can choose between the trend view which displays the trend curves of the vital parameters from the switching on of the device ("Graphic") or the trend browser in table form ("Table").

Up to 6 curves can be displayed in the trend view (by default the parameters HR, SpO_2, PR and NIBP are displayed). Further parameters to be displayed or the timespan (Auto, 30 - 480 min.) over which the trends are displayed can be adjusted via the curve context menu.

To return to the realtime curves, press the softkey [Curves] or press the key **Monitor**, **Back** or **Home**.

The trend browser in table form can also be opened from the mission browser (see chapter 8.5.2 Mission Browser, page 200).

4.3.2 Parameter Context Menu and Curve Context Menu

Parameter context menus and curve context menus only contain menu items that are relevant for the highlighted field. They can be called up for parameter fields and curve fields and open directly in the highlighted field. Proceed as follows to open a parameter context menu or curve context menu and adjust settings:

1. Rotate the jog dial to highlight the required parameter field or curve.
2. Press the jog dial to open the parameter context menu or curve context menu of the highlighted parameter field or curve. The first line of the parameter context menu or curve context menu is highlighted.

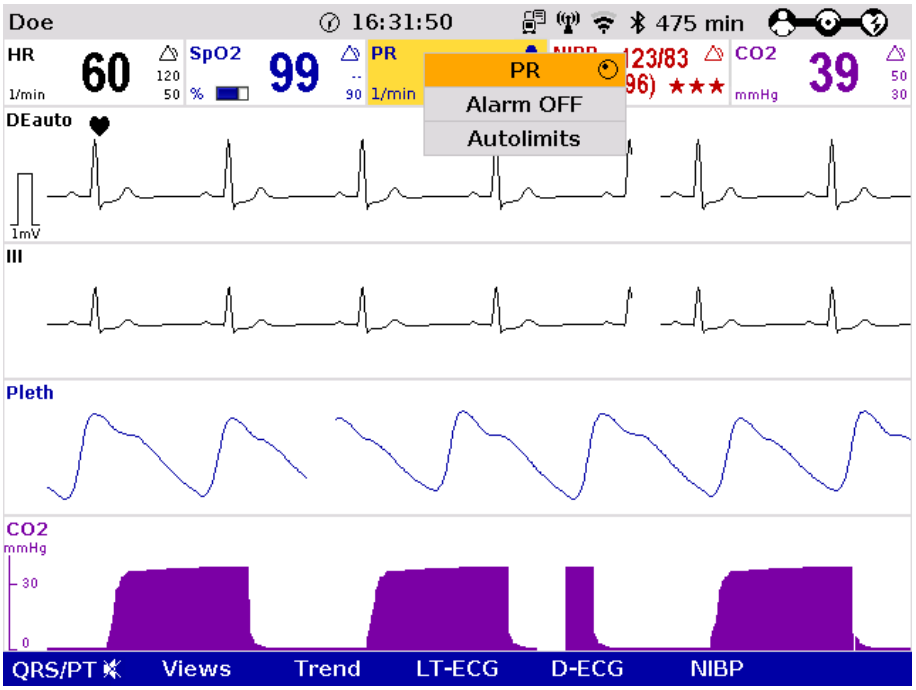

Fig. 4-15 Parameter context menu (illustration may differ)

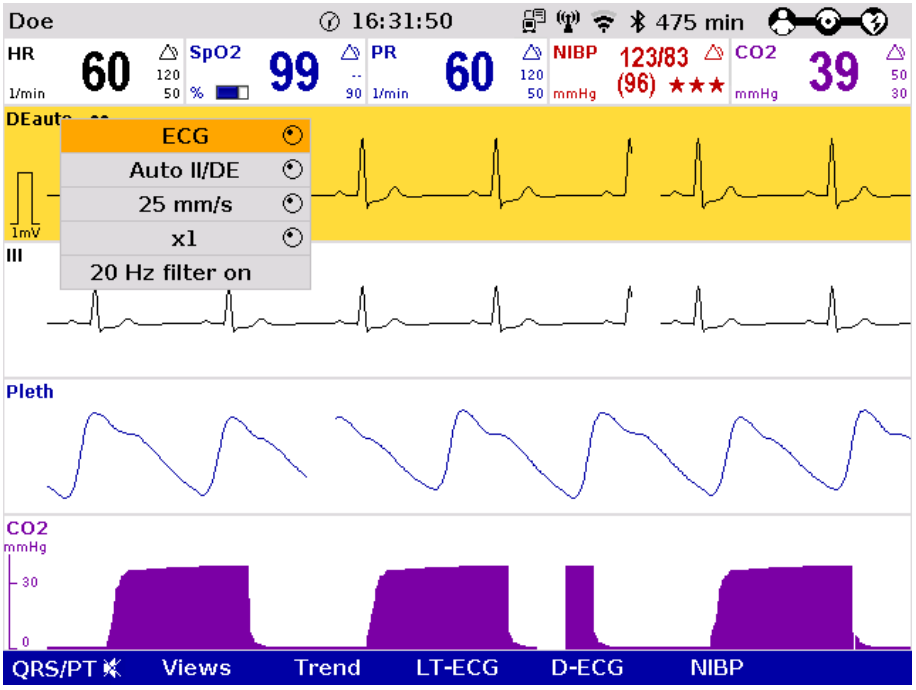

Fig. 4-16 Curve context menu

3. If another value is to be assigned to the parameter field or the curve field for display, press the jog dial and select the required parameter by rotating.
4. Press the jog dial again to confirm selection of the required parameter.
5. Select further parameters of the parameter context menu or curve context menu by rotating the jog dial and confirm by pressing the jog dial.

Press the **Home** key to quit the parameter context menu or curve context menu.

Note If a new curve is selected in the curve context menu, the curves are sorted automatically in ascending order.

4.3.3 Main Menu

To select the main menu of the device and adjust settings, proceed as follows:

1. Press the jog dial to open the main menu of the device.

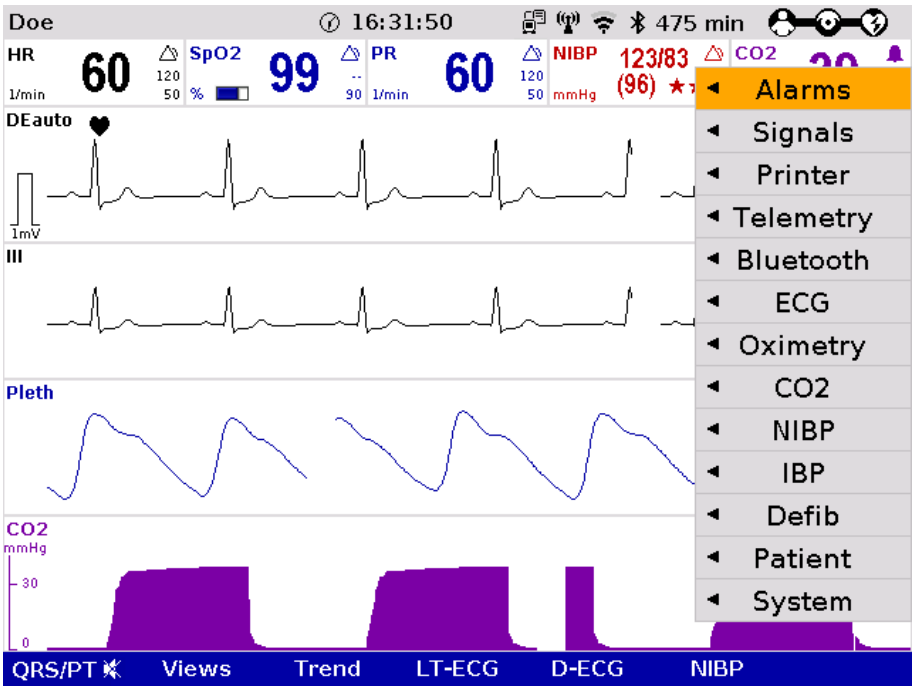

Fig. 4-17 Main menu

2. Select the required item in the main menu by rotating the jog dial and confirm by pressing the jog dial.
3. Select the required menu item in the submenu by rotating the jog dial and confirm by pressing the jog dial.
4. The configuration dialogue opens.

4.3.4 Configuration dialogue

To adjust settings in the configuration dialogue, proceed as follows:

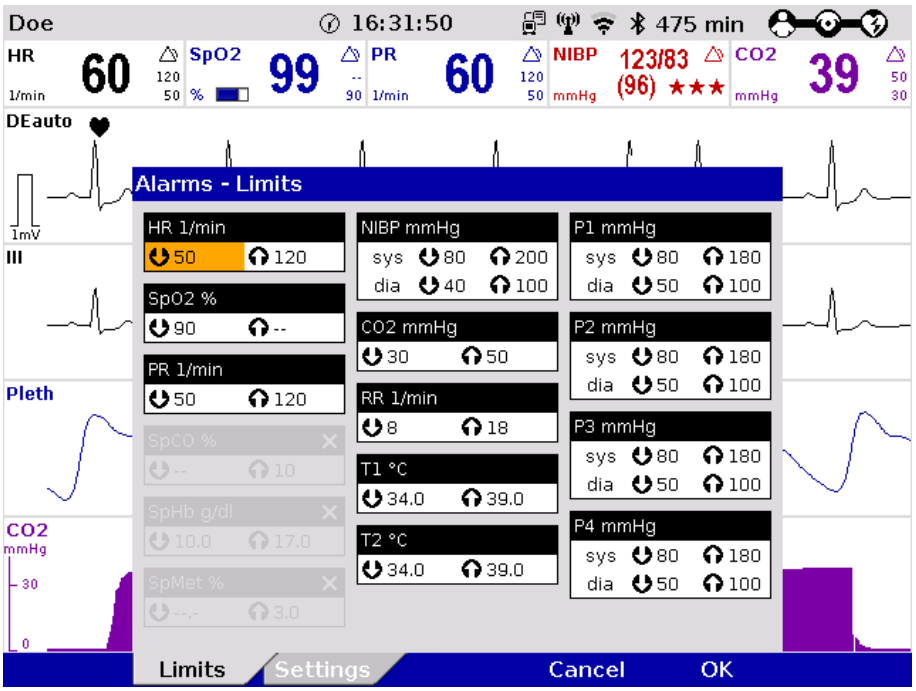

Fig. 4-18 Configuration dialogue

1. Open the configuration dialogue (see chapter 4.3.3 Main Menu, page 53).
2. Rotate the jog dial to highlight the required configuration field.
3. Press the jog dial to select the highlighted configuration field.
4. Select the required settings by repeatedly rotating and pressing the jog dial.

Note A setting (numerical value, text or symbol) can be modified if

- the respective line is highlighted;
- the setting is displayed in bold type.

See chapter 7 Configuration, page 154 for information on the possible settings.

5. Access another tab of the configuration pages by pressing the corresponding softkey.
6. To confirm the settings and close the configuration dialogue, press the softkey [OK].
   To retain the previous settings and close the configuration dialogue, press the softkey [Cancel].

4.4 Disconnecting and Connecting Modules

Caution

Risk of delayed therapy

In general, the separating or connecting of modules should be avoided

- during defibrillator- or pacer therapy,
- when missions are being uploaded or
- when verbal instructions (AAMs) are being played,

as the brief loss of communication between the modules can lead to an interruption and delay of the therapy.

4.4.1 Disconnecting the Monitoring Unit from the Defibrillator/Pacer

Note This procedure applies regardless of whether the patient box is connected to the monitoring unit or not.

1. Grasp the monitoring unit by the carrying handle and pull both snap locks simultaneously forwards and upwards with your thumbs (item A) or push them rearwards and downwards (item B).
2. Tilt the monitoring unit forwards (item C) and remove upwards (item D).

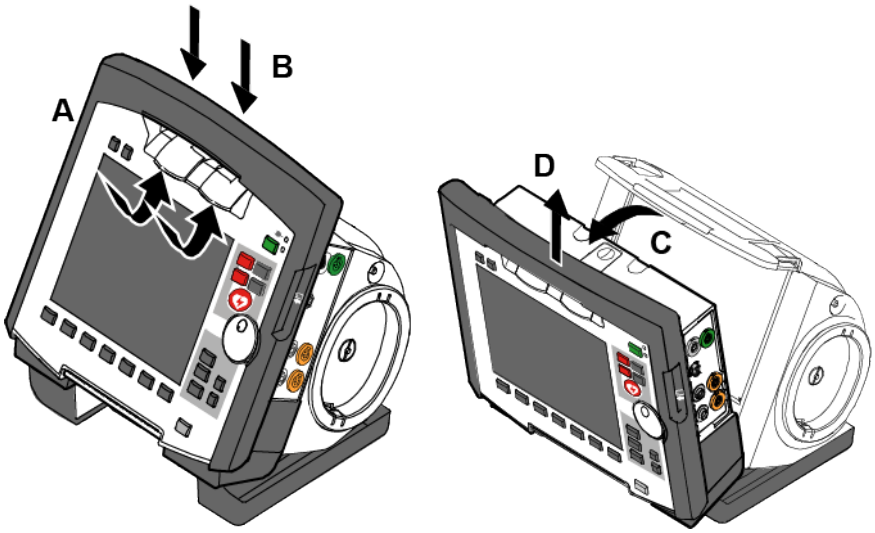

Fig. 4-19 Disconnecting the monitoring unit from the defibrillator/pacer (illustration may differ)

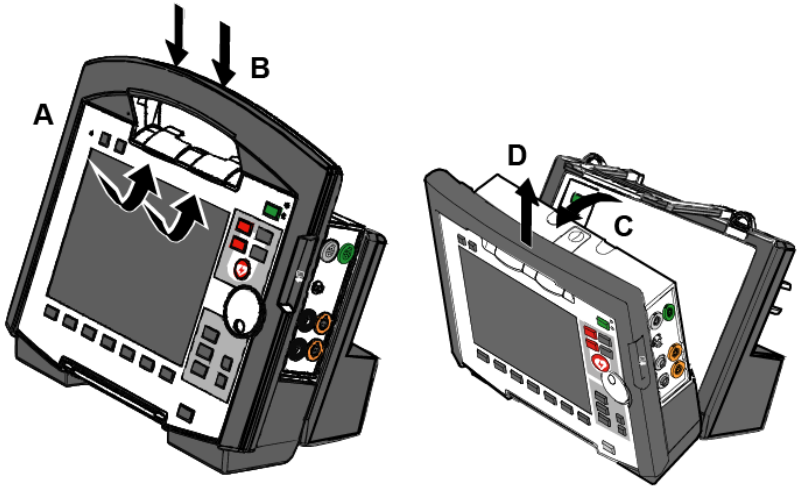

Fig. 4-20 Disconnecting the monitoring unit from the defibrillator/pacer SLIM (illustration may differ)

4.4.2 Disconnecting the Patient Box from the Monitoring Unit

1. Grasp the monitoring unit by the carrying handle and press the snap lock of the patient box downwards (item A).
2. Tilt the patient box rearwards (item B) and remove from the monitoring unit (item C).

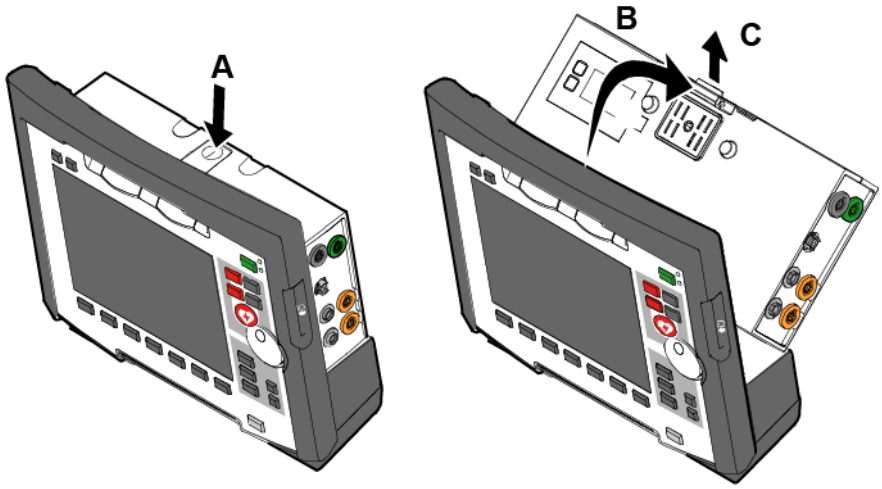

Fig. 4-21 Disconnecting the patient box from the monitoring unit (illustration may differ)

4.4.3 Connecting the Patient Box to the Monitoring Unit

1. Position the patient box with the screen facing the monitoring unit.
2. Fit the patient box at the bottom on the monitoring unit (item A):
   The recesses (item 3) of the patient box engage in the two pins (item 5) of the monitoring unit.
   The connection coding (item 6) on the monitoring unit fits into the recess (item 4) on the patient box.
3. Tilt the patient box towards the monitoring unit (item B) until the closure at the top (item 2) of the patient box audibly engages in the catch on the monitoring unit (item 1).
4. Make sure that the patient box is engaged in both the pins and recesses at the bottom and in the closure at the top.

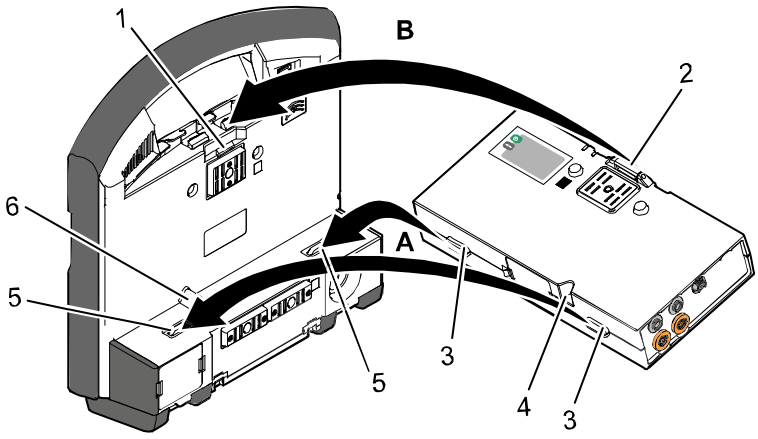

Fig. 4-22 Connecting the patient box to the monitoring unit (illustration may differ)

1 Catch
2 Closure
3 Recess
4 Connection coding recess
5 Pins
6 Connection coding

Caution

Risk of delayed therapy

Before connecting the modules, make sure that there are no metallic objects, e. g. conductive foils, between the individual modules.

4.4.4 Connecting the Monitoring Unit to the Defibrillator/Pacer

Note This procedure applies regardless of whether the patient box is connected to the monitoring unit or not.

1. Raise and tilt the monitoring unit forwards.
2. Fit the monitoring unit onto the defibrillator/pacer at the bottom (item A):
   Both pins (item 4) of the monitoring unit engage in the two recesses (item 3) on top of the base of the defibrillator/pacer.
3. Tilt the monitoring unit towards the defibrillator/pacer (item B) until the closures at the top (item 1) of the monitoring unit audibly engage in the recesses (item 2) on the defibrillator/pacer.

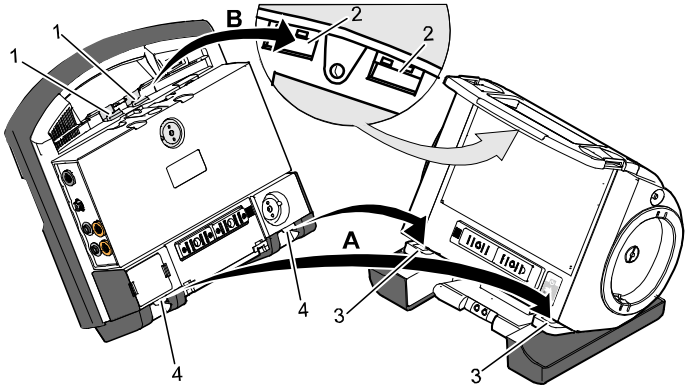

Fig. 4-23 Connecting the monitoring unit to the defibrillator/pacer (illustration may differ)

1 Closure
2 Recess for closure
3 Recess on top of base
4 Pins

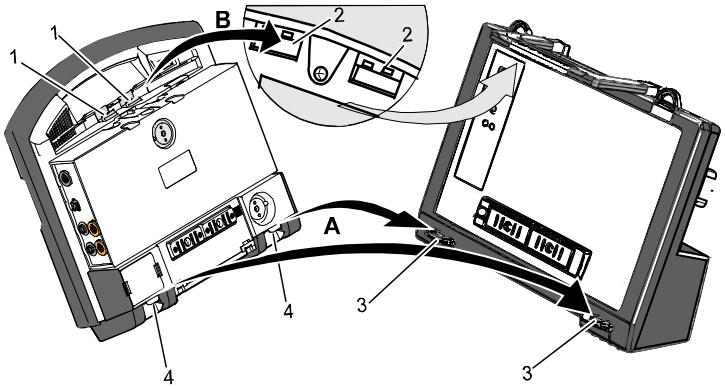

Fig. 4-24 Connecting the monitoring unit to the defibrillator/pacer SLIM (illustration may differ)

1 Closure
2 Recess for closure
3 Recess on top of base
4 Pins

Caution

Risk of delayed therapy

Before connecting the modules, make sure that there are no metallic objects, e. g. conductive foils, between the individual modules.

4.4.5 Removing the Patient Box from the Compact Device

Grasp the monitoring unit by the carrying handle and pull both snap locks simultaneously forwards and upwards with your thumbs or push them rearwards and downwards.

1. Tilt the monitoring unit with the patient box forwards (item A) (see chapter 4.4.1 Disconnecting the Monitoring Unit from the Defibrillator/Pacer, page 55).
2. Push the snap lock of the patient box downwards.
3. Tilt the patient box backwards and remove upwards from the monitoring unit (item B) (see chapter 4.4.2 Disconnecting the Patient Box from the Monitoring Unit, page 55).
4. Tilt the monitoring unit towards the defibrillator/pacer until the closures at the top of the monitoring unit audibly engage in the recesses on the defibrillator/pacer (see chapter 4.4.4 Connecting the Monitoring Unit to the Defibrillator/Pacer, page 57).

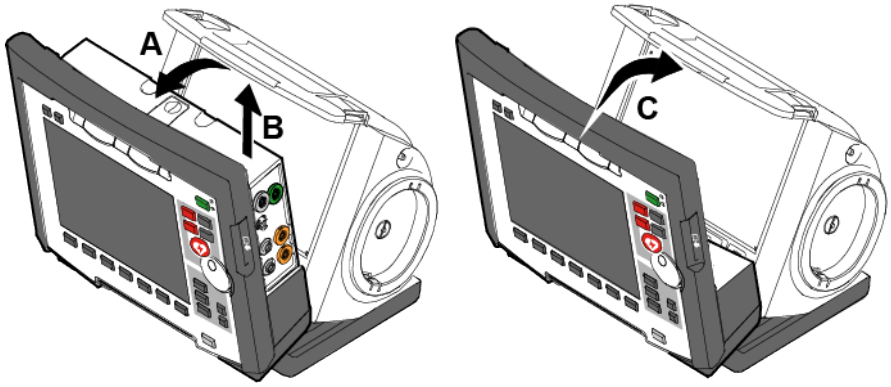

Fig. 4-25 Removing the patient box from the compact device (illustration may differ)

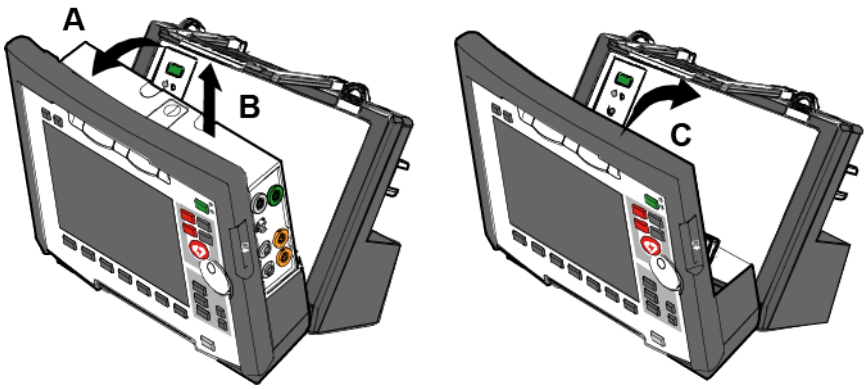

Fig. 4-26 Removing the patient box from the compact device with defibrillator/pacer SLIM (illustration may differ)

4.5 Accessory bag

4.5.1 Fitting the Accessory Bag

Insert the patient box (item 1) into the protective cover (item 6).

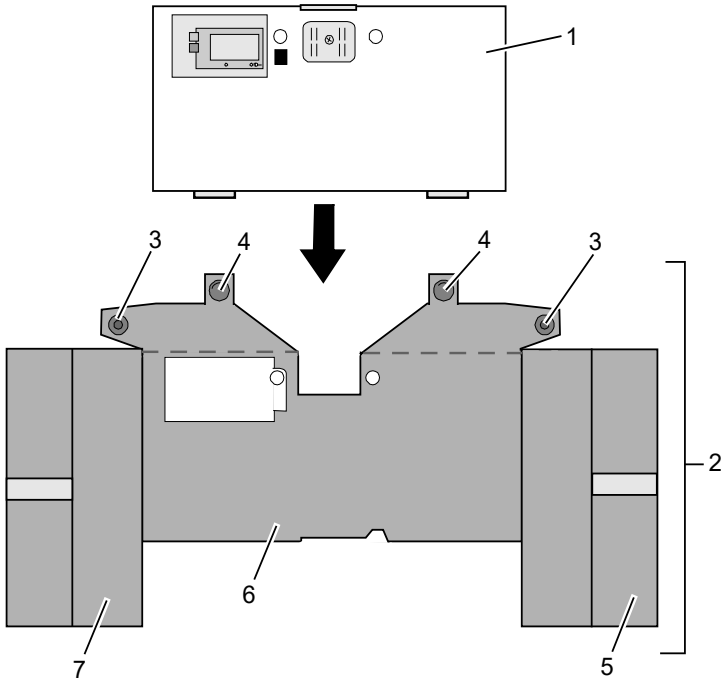

Fig. 4-27 Accessory bag and patient box, front view (illustration may differ)

1 Patient box
2 Accessory bag
3 Lateral press stud
4 Rear press stud
5 Right-hand bag
6 Protective cover
7 Left-hand bag

1. Insert the two flaps with the lateral press studs (item 3) laterally from the patient box.
2. Open the zip fasteners of the left-hand and right-hand bags (items 5 and 7) and press the lateral press studs firmly in place inside on the upper sides of the bags.
3. Close the rear press studs (item 4) on the protective cover.

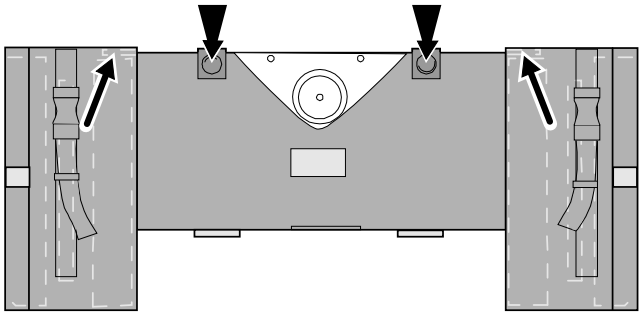

Fig. 4-28 Accessory bag with patient box, rear view (illustration may differ)

Newer accessory bags do no longer have press studs, but are closed with hook and loop fasteners.

Note Older accessory bags with press studs do not fit onto the defibrillator module SLIM.

Caution

Risk of bodily injury or material damage!

The loops at the back of the patient box accessory bag may only be used for fixing the patient box at stretchers, beds etc. or for fixing the sensor bags 04221.71, 04221.72 and 04221.73.

Use an appropriate bracket for the patient box during transport in rescue vehicles.

4.5.2 Packing the Accessory Bag

Caution

Loss of important information

When inserting the sensor cables and ECG cables, make sure that the plugs snap in place beyond the perceptible pressure point.

Fold (gather in loops) but do **not roll up** the connected cable to avoid damage to the cable and allow rapid removal during mission without forming knots.

Inserting cables on right-hand side

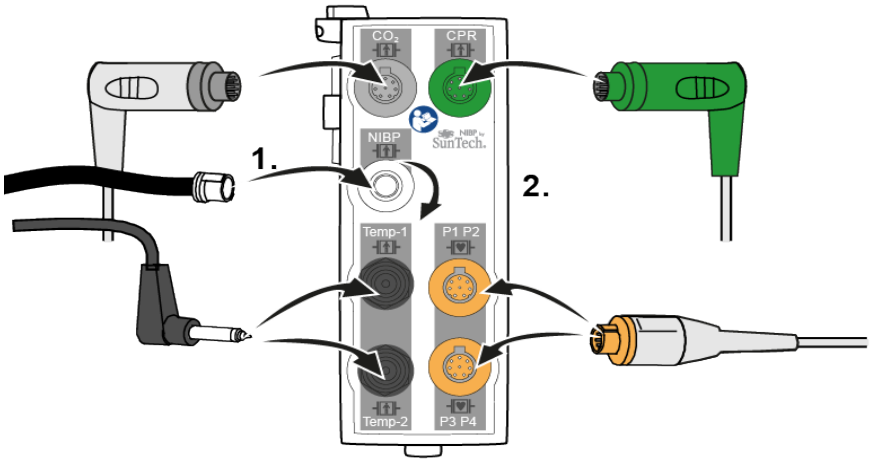

Fig. 4-29 Inserting the plugs on the right-hand side of the patient box

Right-hand bag

Accessories	Item
Temperature sensor (item 1)	Outermost pocket
NIBP cuff (item 2)	Wide elastic band at the side of outermost pocket
CO_2 sensor (item 4)	Left-hand pocket on central section
CO_2 intermediate cable (item 3)	Right-hand pocket on central section
CO_2 adapter, mainstream (item 5)	Elastic band below the patient box interfaces
CPR sensor	Inner pocket
CPR intermediate cable	Inner pocket

Table 4-4 Contents of right-hand bag

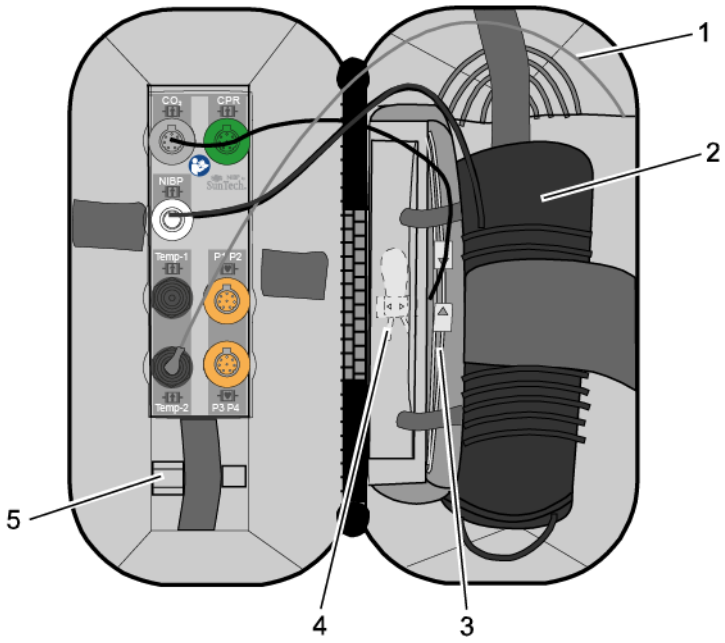

Fig. 4-30 Contents of right-hand bag (illustration may differ)

Note Only connect the temperature sensor to the patient box after attaching it to the patient to avoid false alarm messages that indicate excessively low temperature.

Connecting cables on left-hand side

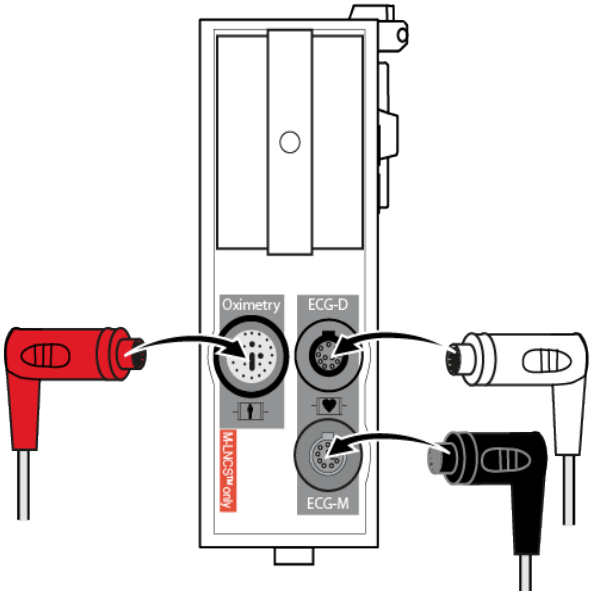

Fig. 4-31 Connecting the plugs on the left-hand side of the patient box (illustration may differ)

Left-hand bag

Accessories	Item
4-pole ECG monitoring cable (item 1)	Outermost pocket
Pack of ECG electrodes (item 2)	Left-hand pocket on central section
Oximetry intermediate cable (item 3)	Right-hand pocket on central section
Oximetry finger sensor (item 4)	Elastic band on central section
Complementary 6-pole ECG diagnostic cable (item 5)	On the left next to the patient box interfaces
Strain relief for right-angle plug (item 6)	–

Table 4-5 Contents of left-hand bag

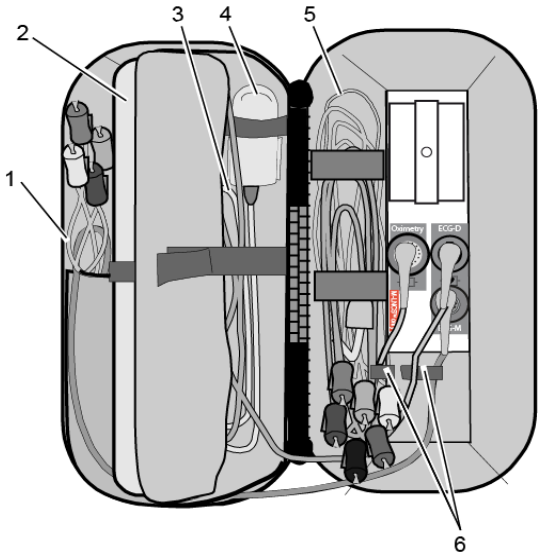

Fig. 4-32 Contents of left-hand bag (illustration may differ)

4.6 Inserting the Device into the Brackets

4.6.1 Defibrillator/Compact Device Bracket

Insertion

Fit the recesses at the bottom of the defibrillator onto the pins of the defibrillator/compact device bracket (item A). The lock on the bracket engages automatically.

If the bracket is equipped with a power supply, the defibrillator and all the modules connected to it will be charged.

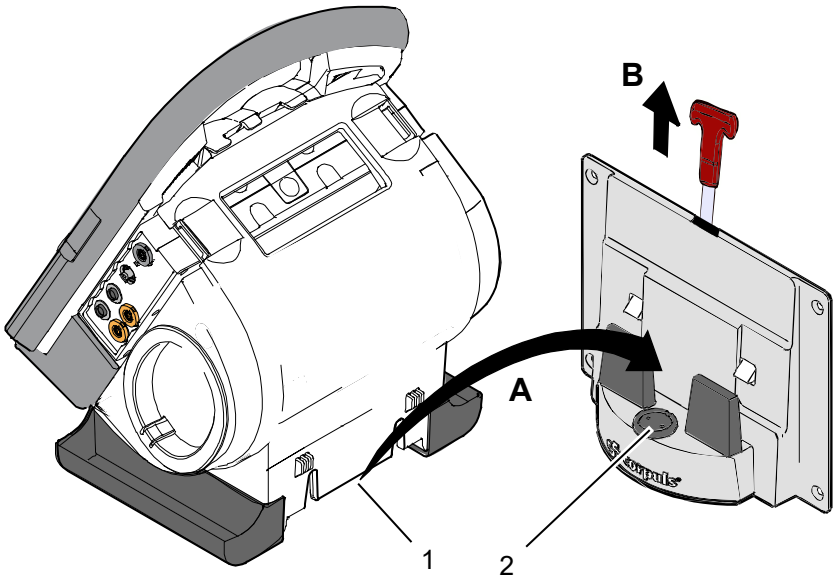

Fig. 4-33 Inserting the compact device into the bracket (Illustration may differ)

1 Defibrillator/Pacer power supply contact area
2 Integrated magnetic clip

Removal

Pull the handle upwards (item B; in older brackets a loop) and remove the defibrillator/compact device from the bracket.

Note Check the contact areas of the defibrillator/pacer (item 1) and the bracket (item 2) regularly for contamination or foreign material, particularly metallic items.

Note Remove the defibrillator/compact device within approx. 10 s after pulling the handle, since the bracket automatically locks again.

Note The defibrillator/compact device charging bracket has to be installed vertically (not on the floor or the ceiling), to ensure sufficient contact with the MagCode connector via gravity.

4.6.2 Monitoring Unit Bracket

Insertion

The monitoring unit is inserted into the bracket in the same manner as it is connected to the defibrillator/pacer (see chapter 4.4.4 Connecting the Monitoring Unit to the Defibrillator/Pacer, page 57):

Note This procedure applies regardless of whether the patient box is connected to the monitoring unit or not.

1. Raise and tilt the monitoring unit forwards.
2. Fit the monitoring unit onto the bracket at the bottom:
   Both pins of the monitoring unit engage in the two recesses of the bracket (item A).
3. Tilt the monitoring unit towards the bracket at the top until the closures at the top of the monitoring unit audibly engage in the recesses on the bracket (item B).

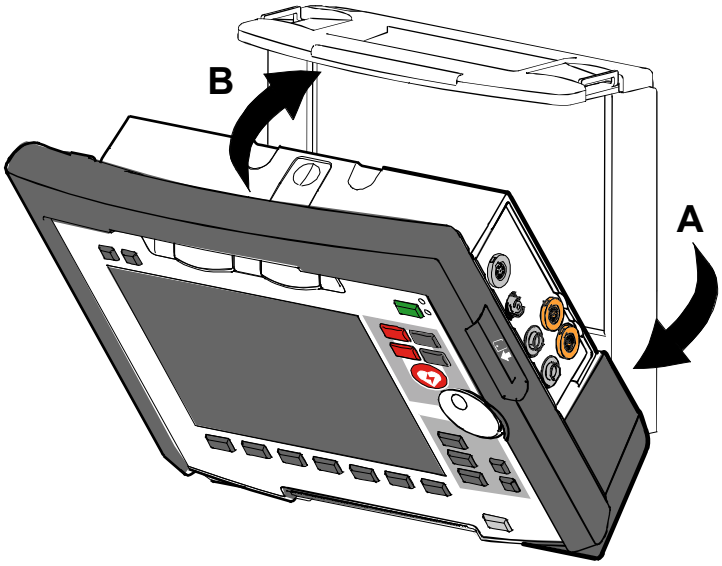

Fig. 4-34 Inserting the monitoring unit into the bracket (Illustration may differ)

Removal

The monitoring unit is removed from the bracket in the same manner as it is disconnected to from the defibrillator/pacer (see chapter 4.4.1 Disconnecting the Monitoring Unit from the Defibrillator/Pacer, page 55):

1. Grasp the monitoring unit by the carrying handle and pull both snap locks simultaneously forwards and upwards with your thumbs or push them rearwards and downwards.
2. Tilt the monitoring unit forwards and remove upwards.

4.6.3 Charging bracket Patient box

Insertion

1. Position the patient box as shown in Fig. 4-35.
2. Fit the patient box with its bottom side onto the long part of the charging bracket (item A):
   The recesses on the patient box engage in both pins (item 4) on the charging bracket.
   The connection coding (item 5) fits in the recess (item 3) on the patient box.
3. Tilt the patient box upwards to the charging bracket (item B) until the lock audibly engages at the patient box.
4. Make sure that the patient box is engaged in the guides and the closures.
5. Connect the safety belt below the patient box and pull tight (not illustrated).

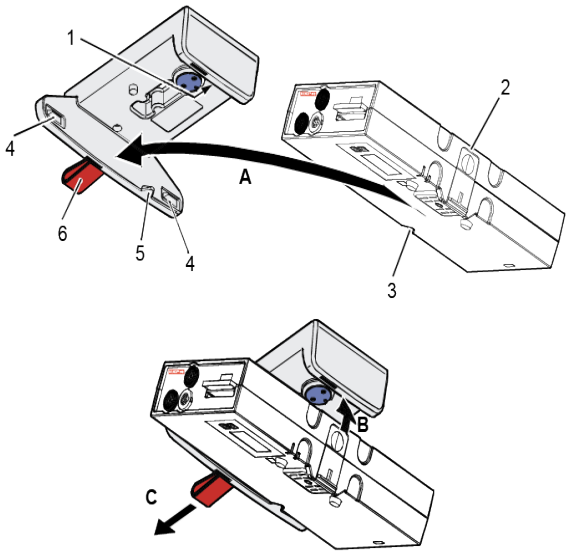

Fig. 4-35 Inserting the patient box into the charging bracket (ceiling installation (illustration may differ))

1 Lock
2 Closure
3 Connection coding recess
4 Pins
5 Connection coding
6 Loop

Removal

1. Disconnect the safety belt (not illustrated in Fig. 4-35).
2. Firmly hold the patient box and pull the loop (item 6) (item C).
3. Remove the patient box from the bracket.

5 Operation – Therapy

5.1 Therapy Electrodes for Defibrillation and Pacing

5.1.1 Types of Therapy Electrodes

Note With the introduction of the corPatch easy therapy electrodes (for adult patients P/N 04324.3, P/N 05120.1, P/N 05120.4 and P/N 05120.5 and for paediatric patients P/N 05120.3 and P/N 05120.2), the higher limits for the body weight of patients have been set. The operational safety as well as medical effectiveness of the therapy electrodes is guaranteed.

Various therapy electrodes are available for defibrillation and pacing:

Therapy electrodes	Scope of application	Patient groups
Shock paddles	Defibrillation, Cardioversion, ECG monitoring	Adults/children
Baby shock electrodes (Adapters for shock paddles)	Defibrillation, Cardioversion, ECG monitoring	Neonates/infants up to max. 5 kg body weight
corPatch easy electrodes (disposable electrodes)	Defibrillation, cardioversion, ECG monitoring Pacing	Adults/children
		Neonates/infants
Internal shock spoons (sterilisable)	Defibrillation, Cardioversion, ECG monitoring	Adults/children
		Neonates/infants

Table 5-1 Therapy electrodes for defibrillation and pacing

Shock paddles The shock paddles can be used for defibrillation, synchronised cardioversion and for ECG monitoring (DE recording). For using the shock paddles with the defibrillator/pacer SLIM, an intermediate adapter cable is needed.

Baby shock electrodes Defibrillation, synchronised cardioversion and ECG monitoring of neonates and infants is performed with baby shock electrodes (adapters) which are fitted onto the shock paddles. The energy is automatically reduced at a ratio of 10:1 if the adapters are fitted (see chapter 5.4.5 Manual Defibrillation and Cardioversion of Neonates and Children, page 84).

corPatch easy electrodes corPatch easy electrodes are already connected to an electrode cable and only need to be connected to the therapy master cable of the defibrillator/pacer. The corPatch easy electrodes pre-connected for the defibrillator/pacer SLIM can be pre-connected even before opening the package.

Internal Shock Spoons The internal shock spoons consist of the shock spoon-electrodes and the handles. Before use the electrodes have to be screwed onto the handles. The handles are already connected to an electrode cable and only need to be connected to the Y-adapter cable of the defibrillator/pacer.

Therapy electrode detection The corpuls3 automatically detects the connected therapy electrodes and, if necessary, adjusts the maximum energy to be released (e.g. with corPatch easy paediatric, shock spoons, etc.). In case this automatic detection is impaired, the user is shown a confirmation dialogue in which the connected electrode type can be selected manually. This function so ensures optimal patient protection at all times.



Warning

Risk of electrical shock

To guarantee a defibrillation protection for patients, users and third parties, use exclusively the accessories indicated in the list of authorised accessories (see chapter 10.8 Approved Accessories, Spare Parts and Consumables, page 242).



Warning

Risk of electrical shock

Before releasing the shock, make sure that there is no risk for users or third parties. Electrical shock from defibrillator use can lead to arrhythmias, ventricular fibrillation or asystole.



Warning

Risk of delayed therapy

The following safety instructions which can also be found on every pouch of the corPatch electrodes have to be complied with when using the corPatch electrodes:

- Do not crush, bend, or fold corPatch electrodes or store them under heavy objects.
- Do not open pouch until ready for use.
- Do not use corPatch electrodes if gel is dry.
- Do not use additional gel on corPatch electrodes.
- Do not overlap corPatch electrodes.
- Use separate ECG electrodes when performing non-invasive pacing.
- Do not touch the patient during defibrillation.
- Do not discharge shock paddles through corPatch electrodes.
- Keep corPatch electrodes clear of any other electrodes or metal parts in contact with the patient.

Not following these instructions for the corPatch electrodes or any other misuse or misapplication of the corPatch electrodes may result in severe patient burns or ineffective therapy.



Caution

Risk of delayed therapy

Do not use corPatch electrodes if

- the packaging is damaged or opened;
- the expiry date indicated on the packaging has passed;
- the electrode is damaged or the connecting lug is bent.



Warning

Burn injuries or non-effective therapy for the patient!

Avoid contact between body parts of the patient, such as exposed skin on the head or limbs, with conductive fluids such as gel, blood, saline, and metal objects such as bed frames or stretchers.



Caution

Risk of delayed therapy

Replace corPatch electrodes for adults at the latest after:

- 24 hours or 50 shocks;
- 8 hours of continuous operation in pacer mode.



Caution

Ineffective shock therapy

When placing the corPatch electrodes on the patient's skin, make sure that no air pockets are included inside the adhesive surface. If necessary, shave. Apply corPatch electrodes from the centre outwards.

Warning

Risk of electrical shock

Before using the shock spoons, read and understand the additional user manual (P/N 04137.02).

5.1.2 Connecting the Electrode Cable

To connect the therapy electrodes, connect the corresponding plug (item 2 or item 3 in Fig. 5-1) to the therapy master cable (item 1). To disconnect, pull back the red sliding sleeve at the therapy master cable and pull apart the plugs. The plug connectors are twistproof.
When using the defibrillator/pacer SLIM the intermediate cable (item 5) has to be connected to the therapy socket (item 4) at the rear side of the defibrillator/pacer SLIM.

Electrode type	Defibrillator/pacer
Shock paddles and shock spoons Connect the plug of the shock paddles or shock spoons (item 2) to the plug of the therapy master cable (item 1) of the defibrillator/pacer. The connection must snap into place perceptibly.	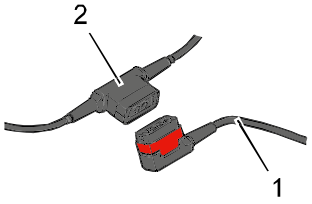
corPatch easy electrodes (only P/N 04324.1 and 04324.2) Connect the plug (item 3) of the corPatch easy electrodes to the plug of the therapy master cable (item 1) of the defibrillator/ pacer. The connection must snap into place perceptibly.	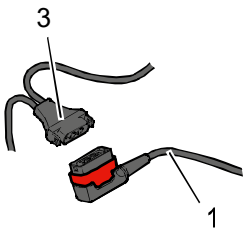
Intermediate cable and corPatch easy electrodes (only P/N 05120.5, 05120.2 and 04324.3) Connect the plug (item 5) correctly orientated (item 1) to the therapy socket (item 4) of the defibrillator/pacer SLIM or to the therapy master cable.	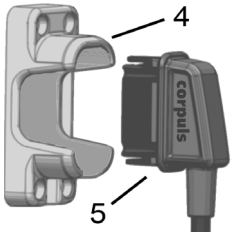

Fig. 5-1 Connecting the therapy electrode cables (illustration may differ)

1 Therapy master cable with plug and red sliding sleeve
2 Plug of shock paddles and shock spoons
3 Plug of corPatch easy electrodes
4 Therapy socket
5 Plug of corPatch intermediate cable

Note For orientation and correct connection of the plugs, a raised nub is palpable on both the red sliding sleeve and the plug of the therapy electrodes (only P/N 04324.1 and 04324.2). When oriented correctly, the electrodes are easy to connect.

Note For using the shock paddles with the defibrillator/pacer SLIM, an intermediate adapter cable is needed (see chapter 10.8 Approved Accessories, Spare Parts and Consumables, page 242).

Caution

Risk of delayed therapy

Do not use the therapy master cable corpuls3 SLIM/corpuls1 (P/N 04326.0BA) as extension cable for the therapy master cable at the defibrillator/pacer (P/N 04300). Likewise, the therapy master cable corpuls3 SLIM/corpuls1 must not be combined with a second therapy master cable corpuls3 SLIM/corpuls1.

Caution

Risk of delayed therapy

If the electrode plug is turned the wrong way and connected by force to the therapy master cable, there will be a malfunction in the paddle interface and an alarm message will be issued.

The plug connector has to be disconnected and checked for damage. If no damage is visible, connect the plug connector again, oriented correctly.

5.1.3 Removing the Shock Paddles from their Holders and Re-inserting them

Removing the shock paddles

To remove the shock paddles from their holders at the defibrillator/pacer, proceed as follows:

Prerequisite: The defibrillator/pacer is equipped with shock paddle holders.

1. Rotate the shock paddles by approx. 20° towards the front (item A) or towards the rear (item B).
2. In this position pull the shock paddles away from the device (item C).

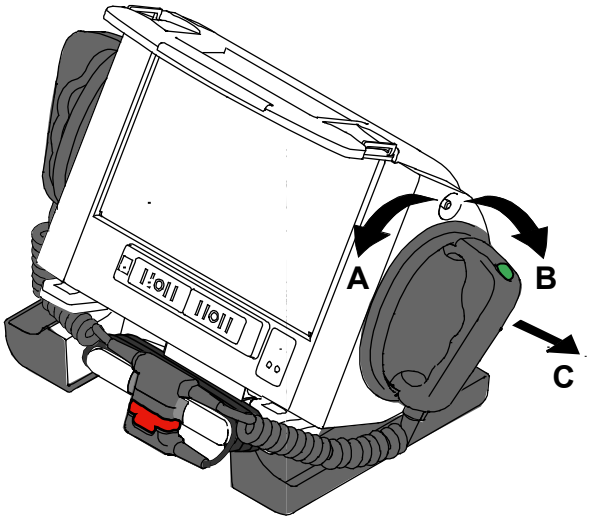

Fig. 5-2 Removing the shock paddles from their holders

Re-inserting the shock paddles

To re-insert the shock paddles, push them into the holders until they both perceptibly engage.

Note

The shock paddle with the green button (APEX) is to be placed in the right-hand holder and the shock paddle with the red button (STERNUM) in the left-hand holder. For guidance, corresponding information labels are placed above the holders.

5.2 Preparing the Patient for Defibrillation, Cardioversion and Pacer Therapy



Caution

Risk of burn injuries

As a side effect of the defibrillation, a reddening of the skin and, in case of excessive hair, burn injuries may occur.



Warning

Risk of inadequate therapy

Recording of the ECG with therapy electrodes or via the 4 pole ECG monitoring cable is impaired if the skin is contaminated, wet or sweaty or in case of excessive hair.

Preparing the Patient

Before therapeutic measures can be performed, the patient has to be prepared:

1. Remove clothes from the patient's upper body.
2. Remove any item of jewelry that is located close to or between the two therapy electrodes.
3. Remove excessive hair so that the conductive surface of the therapy electrodes has full contact with the skin.
4. Clean and dry the skin before using therapy electrodes.

Patient Impedance

With attached therapy electrodes, the patient impedance is measured by the device and displayed in inverted colours as "OK", "LOW" or "HIGH" in defibrillation mode.

When the impedance is too low or too high, the shock release is blocked. When using the shock spoons, shock release is possible also in case of low impedance.

High impedance is displayed in case of:

- excessive hair,
- contaminated skin,
- shock paddles not completely wetted with electrode gel,
- too little contact pressure of the shock paddles,
- wrong position of the corPatch electrodes,
- Air pockets included when attaching corPatch electrodes.

Low impedance is displayed in case of:

- use of too much electrode gel on the shock paddles,
- too little distance between the therapy electrodes,
- wet patient skin,
- technical problems with the electrode cable.



Warning

Risk of electrical shock

On metallic and/or wet surfaces the following protective measures have to be taken during defibrillation:

- Release of the shock in semi-modular operation (only when using corPatch electrodes) with sufficient safety distance to patient;
- Placing the patient on a dry stretcher or non-conductive surface before defibrillation.

5.3 Defibrillation in AED Mode

5.3.1 Information on the AED Mode

Warning

Risk of electrical shock

Defibrillation and cardioversion must not be performed without protective measures:

- on a metal surface;
- on a wet surface

AED

After pressing the **AED** key the following screen structure appears:

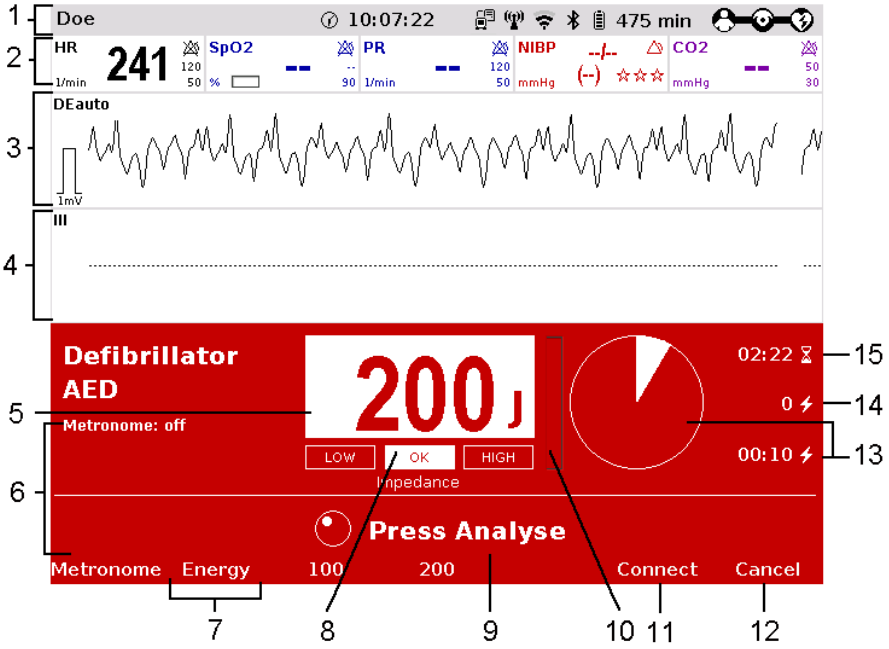

Fig. 5-3 AED mode, initial screen (illustration may differ)

1 Status-/alarm line
2 Parameter area
3 Current ECG (derivation II/DEauto)
4 Configurable curve area
5 Automatic pre-set energy
6 Metronome
7 Softkey [Energy] for adjusting energy settings
8 Patient impedance
9 Operating instruction
10 State of charge
11 Softkey [Connect] to start a Bluetooth connection
12 Softkey to cancel the charging
13 Time since last shock/analysis in numbers and as pie chart
14 Number of shocks since switching on the device
15 Time since defibrillation mode was launched

When corpuls3 is in AED mode, the user is guided through a standardised resuscitation protocol. The algorithm is governed by the current recommendations.

Note By default, the biphasic defibrillation impulse 6/4 is set. Upon request, the biphasic defibrillation impulse 4/3 can be configured by a service technician.

Note The use of a defibrillator in AED mode is not recommended for patients of less than 12 months of age.

AED mode for children If no special paediatric AED device is available for patients aged between 1 and 8 years, it is recommended to use the defibrillator in AED mode with corPatch electrodes (Pediatric or paediatric).

The boot-up time of the corpuls3 is reduced if the corpuls3 is switched on directly in AED mode by pressing the **AED** key.

The curve field in the first line of the screen is pre-set and cannot be configured. There, the ECG recorded by the respective therapy electrodes is displayed, switching automatically between IIauto and DEauto. The switch between IIauto and DEauto only occurs when a valid ECG signal is present and not when the cable is connected. Lead DE is displayed preferentially.

corPatch electrodes:	*DEauto* lead, recorded via corPatch electrodes
Shock paddles:	*Einthoven lead IIauto*, recorded via ECG electrodes and 4-pole ECG monitoring cable or *DEauto* lead, recorded via shock paddles, if no 4-pole ECG monitoring cable is connected

The value of ECG amplitude is set to 10 mm/mV. Automatic ECG amplitude control is disabled.

The following keys are available to operate the device in AED mode:

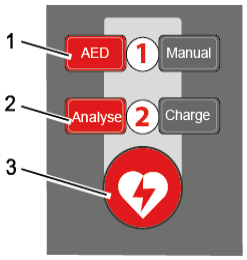

1. AED
2. Analyse
3. Shock

Fig. 5-4 AED mode function keys

When using corPatch electrodes, the shock is released by pressing the **Shock** key at the monitoring unit. When using the shock paddles, the shock is released by pressing both buttons at the shock paddles.

Charging tone During the charging process, the rising pitch of the charging tone (configurable by the user OPERATOR) indicates the progress of charging acoustically and serves as a warning to bystanders.

The charged defibrillator can be discharged internally by pressing the softkey [Cancel] or by leaving the therapy mode (with the key **Monitor**, **Pacer** oder **Manual**).

Audio recording In AED mode, a configurable audio recording option is available which is disabled by default. If the audio recording option is enabled by the person responsible for the device, all surrounding noises are recorded (see chapter 7.4.4 Configuration of the Defibrillation Function (Persons Responsible for the Device), page 179).

Softkey [Energy] In AED mode, the option energy settings is available which is disabled by default. If the option is enabled by the person responsible for the device, the softkey [Energy] is available, which activates the energy selection via jog dial.

Auto Analyse In AED mode, the option "Autostart" is available which is disabled by default. If the option is enabled by the person responsible for the device, the ECG analysis starts automatically after 3 seconds warning time and

the speech- and text message "**Do not touch patient - Analysing heart rhythm**". The symbol "Auto Analyse" besides the defibrillation mode indicates that the option is activated. Starting the analysis manually by pressing the **Analyse** key is still possible.

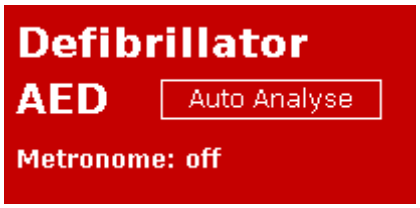

Fig. 5-5 Symbol Auto Analyse activated

Note When shock paddles, shock spoons or testing equipment (Testbox, corpuls simulator, Testload) are connected, the function „Autostart Analyse“ is disabled.

CPR timer

As of software version 3.2 the functionality of the display "Time since last shock (last)" has been extended: The CPR timer is started by pressing the **Analyse** key or **Charge** key and runs in the background, even if the user changes to another mode.

To reset the CPR timer (starting the CPR cycle again), press the softkey [Cancel] or [Cont.CPR]. After the ECG analysis (result negative) and after the shock is delivered or aborted (30 s ready-for-shock-period passed or by user or due to technical problems), the CPR timer is reset automatically. If the option is enabled by the person responsible for the device, the remaining time of the CPR cycle (2 or 3 minutes) can be displayed as a pie chart.

Softkey [Connect] As of software version 3.2 it is possible to establish a Bluetooth connection with a corpuls cpr.

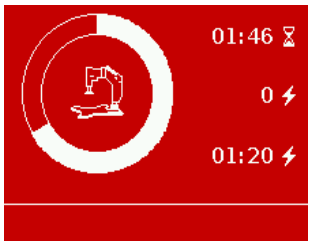

Fig. 5-6 Symbol for connected corpuls cpr in pie chart

Warning

Risk of inadequate therapy

In each individual case the trained user determines the progress of treatment according to medical requirements. The procedure shown here reflects the operating possibilities of the device.

Warning

Internal injuries or less defibrillation success!

To perform a defibrillation, the therapy with the corpuls cpr must be interrupted. In case of the compression synchronised therapy, this will be ensured by the logic of both devices. If the defibrillator is used without the synchronisation option, the user is responsible for the coordination.

Pause the corpuls cpr to perform a defibrillation.

Warning

Risk of inadequate therapy/Implanted pacer!

Irreversible damage to myocardium due to placement of therapy electrodes over the pacer unit.

Examine if there is an implanted pacer.

Do not place therapy electrodes directly over the pacer unit.

After an external defibrillation, observe the pacer patient and have the implanted pacer checked.



Warning

Risk of delayed therapy/Implanted pacer!

In patients with an implanted pacer, it is possible that shockable ECG rhythms or arrhythmias will only be detected to a limited extent.

Keep pacer patients under close surveillance. Check the pulse of the patient to make sure that the device does not measure the frequency of the implanted pacer.



Warning

Risk of delayed therapy

If the connection status of the corpuls3 is changed during an ECG analysis in AED mode (from radio connection to mechanical connection or vice versa), the ECG analysis will be aborted. In this case, start the ECG analysis again.



Warning

Risk of electrical shock

Equipment which is not defibrillation-proof must be disconnected from patients during defibrillation.



Warning

Risk of electrical shock

If for a defibrillation the electrodes of the 4-pole ECG monitoring cable are connected to the patient, the complementary 6-pole ECG diagnostic cable has to be either connected to the patient completely, safely stored in the accessory bag or disconnected from the patient box.



Warning

Loss of important information

In defibrillation mode, no physiological alarms are indicated or saved. Technical alarms are indicated visually and acoustically.



Warning

Must not be used with conscious patients!

Electric shock with defibrillator use can lead to the following adverse effects in patients, users and third parties: Arrhythmias, ventricular fibrillation or asystole.

Do not use the corpuls3 if the patient is conscious.

Even in conscious patients, ventricular fibrillation or ventricular tachycardia can be detected.

Automatic System Supervision Function

The device is equipped with an automatic system supervision function that continuously detects and compensates for system deviations between internal modules.

If relevant inconsistencies are detected, that can't be resolved otherwise, the affected modules will restart automatically. This restores the intended overall system functionality and module synchronization.

During this automatic restart, some functions may be temporarily unavailable. This automatic restart is a part of the system architecture.

No action is required.

1. Wait until the restart is complete.

5.3.2 Defibrillation in AED mode with corPatch Electrodes

When using corPatch electrodes, the ECG is obtained and the analysis is performed via the corPatch electrodes attached to the patient (indicated as DE). An additional 4-pole ECG monitoring cable is not needed.

AED

1. To start the AED mode, press the **AED** key.
2. Prepare the patient (see chapter 5.2 Preparing the Patient for Defibrillation, Cardioversion and Pacer Therapy, page 70).
3. Check the package of the corPatch electrodes for damage and check the expiry date.
4. Attach corPatch electrodes to the patient, as shown on the electrode package.
5. If configured, select the required energy level with the jog dial or via the softkeys and confirm by pressing the jog dial (see chapter 7.4.4 Configuration of the Defibrillation Function (Persons Responsible for the Device), page 179).

Analyse

6. To start the ECG analysis, press the **Analyse** key. If the option "Autostart" is enabled, the ECG analysis starts automatically after 3 seconds warning time and the speech- and text message "`Do not touch patient - Analysing heart rhythm`".
7. During the charging process, the rising pitch of the charging tone (configurable by the user OPERATOR) indicates the progress of charging acoustically and serves as a warning to bystanders. With the message "`Deliver shock`" and the ready-signal, the device indicates that the defibrillation can be performed.

Performing a defibrillation



8. To perform defibrillation, hold down the **Shock** key until the shock has been delivered.
9. If the shock has been released successfully, the message `Shock performed` is shown. Afterwards, a shock protocol is printed automatically.
10. The message `Shock not recommended` indicates that the defibrillation cannot be performed and that the **Shock** key is locked.
11. Continue with the standardised or locally valid resuscitation protocol. To reset the CPR timer (starting the CPR cycle again), press the softkey [Cancel].

Analyse

12. The message `Press Analyse` indicates that the **Analyse** key should be pressed again to perform an ECG analysis.



Warning

Risk of delayed therapy

During ECG analysis, it is essential to avoid external commotion and vibration. Keep the patient lying down calmly.

Do not touch the patient.

It is essential to discontinue artificial respiration during ECG analysis. This leads to false analysis results since the periodic expansion of the chest may simulate an ECG rhythm.

Note With the introduction of the corPatch easy therapy electrodes (for adult patients P/N 04324.3, P/N 05120.1, P/N 05120.4 and P/N 05120.5 and for paediatric patients P/N 05120.3 and P/N 05120.2), the higher limits for the body weight of patients have been set. The operational safety as well as medical effectiveness of the therapy electrodes is guaranteed.

Note The CPR rhythm can be supported acoustically by activating the metronome via the softkey [Metronome].

Note If the corpuls3 detects a shockable rhythm, the defibrillator starts charging. If the corpuls3 detects a non-shockable rhythm during further analysis, the defibrillator aborts charging and discharges internally. The user has to re-start analysis.

Note The selected energy level is available for 30 seconds after charging. If no shock has been generated during this time, the device is discharged internally.

5.3.3 Defibrillation in AED Mode with Shock Paddles

To perform a defibrillation in AED mode with shock paddles, an ECG must be obtained for analysis via the ECG electrodes and the 4-pole ECG monitoring cable.

AED

1. To start the AED mode, press the **AED** key.
2. Prepare the patient (see chapter 5.2 Preparing the Patient for Defibrillation, Cardioversion and Pacer Therapy, page 70).
3. Place all four ECG electrodes of the 4-pole ECG monitoring cable on the patient (see chapter 6.3 Monitoring ECG, page 108).
4. Completely wet the electrode surfaces of the shock paddles with defibrillation electrode gel.
5. If configured, select the required energy level with the jog dial or via the softkeys and confirm by pressing the jog dial (see chapter 7.4.4 Configuration of the Defibrillation Function (Persons Responsible for the Device), page 179).

Analyse

6. To start the ECG analysis, press the **Analyse** key or one of the buttons at the shock paddles. If the option "**Autostart**" is enabled, the ECG analysis starts automatically after 3 seconds warning time and the speech- and text message "`Do not touch patient - Analysing heart rhythm`".
7. During the charging process, the rising pitch of the charging tone (configurable by the user OPERATOR) indicates the progress of charging acoustically and serves as a warning to bystanders. With the message "`Deliver shock`" and the ready-signal, the device indicates that the defibrillation can be performed.
8. Place the APEX shock paddle (Fig. 5-7, item 1) on the lower left of the thorax beside apex of the heart (5th ICS).
9. Place the STERNUM shock paddle (Fig. 5-7, item 2) to the right of the sternum.

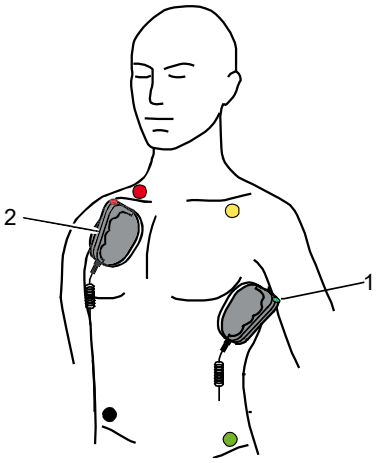

Fig. 5-7 Applying the shock paddles

1 Position of the APEX shock paddle
2 Position of the STERNUM shock paddle

Performing a defibrillation

10. Hold down both shock paddle buttons until a shock has been released. By pressing the shock paddle buttons a confirmative tone sounds. If the shock has been released successfully, the message `Shock performed` is shown. Afterwards, a shock protocol is printed automatically.
11. The message `Shock not recommended` indicates that the defibrillation cannot be performed and that the buttons at the shock paddles are locked.
12. Continue with the standardised or locally valid resuscitation protocol. To reset the CPR timer (starting the CPR cycle again), press the softkey [Cancel].
13. To start the ECG analysis, press the **Analyse** key or one of the buttons at the shock paddles again.

Analyse

Warning

Risk of delayed therapy

During ECG analysis, it is essential to avoid external commotion and vibration. Keep the patient lying down calmly. Do not touch the patient.

It is essential to discontinue artificial respiration during ECG analysis. This leads to false analysis results since the periodic expansion of the chest may simulate an ECG rhythm.

Warning

Risk of electrical shock

Make sure that no defibrillation electrode gel gets into the insulation area between the electrode surface and the handle. Only use defibrillation electrode gel intended for this purpose.

Note If the paddles have not been used for some time, the paddle buttons have to be pressed repeatedly.

Note The selected energy level is available for 30 seconds after charging. If no shock has been generated during this time, the device is discharged internally.

Note For safety reasons, when using shock paddles, the keys **Charge** and **Shock** on the monitoring unit are blocked. The charging and release of the defibrillation shock can only be triggered via the shock paddle buttons.

Note Energy selection can be performed by connecting both electrode surfaces of the shock paddles (short-circuiting). To decrease the energy, briefly press the APEX shock paddle button. To increase the energy, briefly press the STERNUM shock paddle button.

Note The CPR rhythm can be supported acoustically by activating the metronome via the softkey [Metronome].

5.4 Defibrillation in manual mode

5.4.1 Information on Manual Defibrillation and Cardioversion

Warning

Risk of electrical shock

Defibrillation and cardioversion must not be performed without protective measures:

- on a metal surface;
- on a wet surface

In the manual defibrillation mode of corpuls3, the users have full freedom of action and decision-making concerning operation of the defibrillator. They have to assess the ECG and can, depending on the patient, select the necessary energy and trigger the defibrillation- or cardioversion shock.

Note By default, the biphasic defibrillation impulse 6/4 is set. Upon request, the biphasic defibrillation impulse 4/3 can be configured by a service technician.

Manual

After pressing the **Manual** key the following screen structure appears:

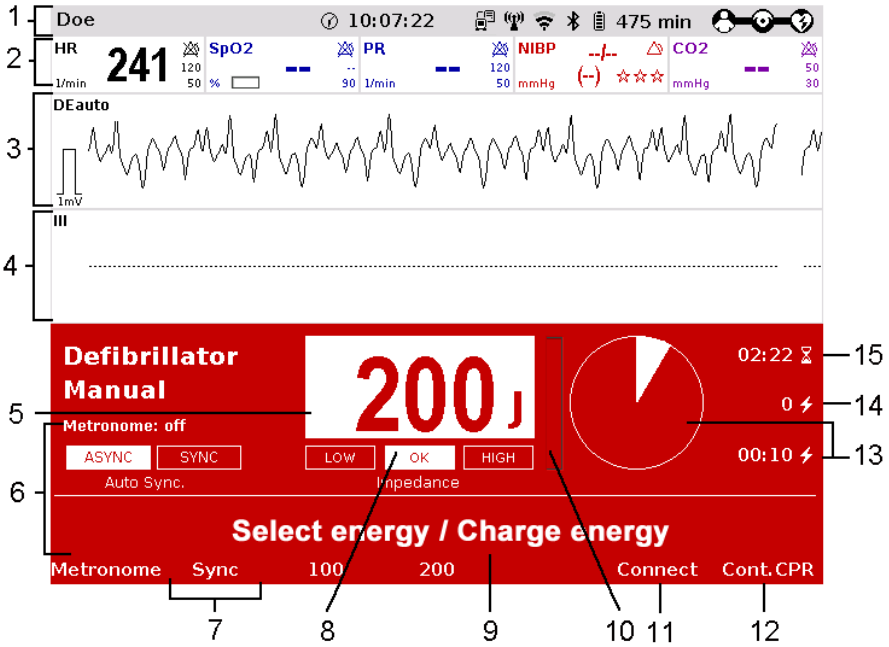

Fig. 5-8 Manual defibrillation, initial screen (illustration may differ)

1 Status-/alarm line
2 Parameter area
3 Current ECG (derivation II/DEauto)
4 Configurable curve area
5 Pre-set energy
6 Metronome
7 Softkey [Sync] for synchronisation settings
8 Patient impedance
9 Operating instruction
10 State of charge
11 Softkey [Connect] to start a Bluetooth connection
12 Softkey [Cont.CPR] for continuing CPR measures
13 Time since last shock/analysis in numbers and as pie chart
14 Number of shocks since switching on the device
15 Time since defibrillation mode was launched

The curve field in the first line of the screen is pre-set and cannot be configured. There, the ECG recorded by the respective therapy electrodes is displayed, switching automatically between IIauto and DEauto. The switch between IIauto and DEauto only occurs when a valid ECG signal is present and not when the cable is connected. Lead DE is displayed preferentially.

corPatch easy electrodes & shock spoons	*DEauto* lead, recorded via corPatch electrodes
Shock paddles:	*Einthoven lead IIauto*, recorded via ECG electrodes and 4-pole ECG monitoring cable or *DEauto* lead, recorded via shock paddles, if no 4-pole ECG monitoring cable is connected

Amplification of the ECG curves is 10 mm/mV. Automatic ECG amplitude control is disabled.

The boot-up time of the corpuls3 is reduced if the corpuls3 is switched on directly in manual defibrillation mode by pressing the **Manual** key.

Persons responsible for the device can pre-set the energy level with the function Auto Energy. This energy level is automatically available when the device is switched to manual defibrillation mode for the first time (see chapter 7.2 Configuration of the Monitoring Functions, page 165).

The following keys are available to operate the device in manual mode:

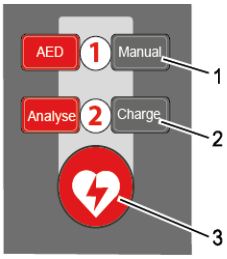

1. Manual
2. Charge
3. Shock

Fig. 5-9 Function keys for manual defibrillation and cardioversion

When using corPatch electrodes or shock spoons, the shock is released by pressing the **Shock** key at the monitoring unit. When using the shock paddles, the shock is released by pressing both buttons at the shock paddles.

The charged defibrillator can be discharged internally by pressing the softkey [Cancel] or by leaving the therapy mode (with the key **Monitor**, **Pacer** oder **AED**).

Cardioversion settings are adjusted via the softkey [Sync].
The following settings are available:

- **Auto Sync:** If QRS complexes are detected, the corpuls3 synchronises the shock release automatically for a cardioversion. If the corpuls3 does not detect QRS complexes within one second, the shock is released without synchronisation. The mode can be disabled by the user OPERATOR.
- **Sync**: If QRS complexes are detected, the device synchronises the shock release for a cardioversion.
  If no QRS complexes are detected, a cardioversion or defibrillation is not possible.
- **Async** The defibrillation is performed only asynchronously. In this mode, cardioversion is not possible. In this mode, no QRS markers are displayed.

Note If the mode "Auto Sync" has been disabled by the user OPERATOR, the mode is no longer available and the mode "Async" is enabled by default.



Warning

Impaired synchronisation due to artefacts!

In synchronous defibrillation with shock paddles without the 4-pole ECG monitoring cable, the positioning of the paddles can cause ECG artifacts that may impair synchronisation.

Pay special attention to good contact and detection of regular QRS complexes.



Warning

Risk of inadequate therapy

A cardioversion may lead to ventricular fibrillation or asystole. When performing a cardioversion, mind the following:

- The ECG has to be stable with a heart rate of at least 60/min.
- The synchronisation mode has to be set to SYNC.
- The QRS marks (triangles) have to mark each QRS complex. Do **NOT** rely on the QRS-/pulse tone alone.
- The shock release has to be effected according to valid guidelines.
- To release a shock, the **Shock** key at the monitoring unit or the buttons at the shock paddles have to be held down until a shock is released.



Warning

Risk of electrical shock

Equipment which is not defibrillation-proof must be disconnected from patients during defibrillation and cardioversion.



Warning

Risk of electrical shock

If for a defibrillation the electrodes of the 4-pole ECG monitoring cable are connected to the patient, the complementary 6-pole ECG diagnostic cable has to be either connected to the patient completely, safely stored in the accessory bag or disconnected from the patient box.



Warning

No physiological alarm events are displayed and saved in defibrillation mode. Technical alarms are indicated visually and acoustically.

Audio recording In manual mode, a configurable audio recording option is available which is disabled by default. If the audio recording option is enabled by the person responsible for the device, all surrounding noises are recorded (see chapter 7.4.4 Configuration of the Defibrillation Function (Persons Responsible for the Device), page 179).

CPR timer As of software version 3.2 the functionality of the display "Time since last shock (last)" has been extended: The CPR timer is started by pressing the **Analyse** key or **Charge** key and runs in the background, even if the user changes to another mode. To reset the CPR timer (starting the CPR cycle again), press the softkey [Cancel] or [Cont.CPR]. After the ECG analysis (result negative) and after the shock is delivered or aborted (30 s ready-for-shock-period passed or by user or due to technical problems), the CPR timer is reset automatically. If the option is enabled by the person responsible for the device, the remaining time of the CPR cycle (2 or 3 minutes) can be displayed as a pie chart.

Automatic System Supervision Function

The device is equipped with an automatic system supervision function that continuously detects and compensates for system deviations between internal modules.

If relevant inconsistencies are detected, that can't be resolved otherwise, the affected modules will restart automatically. This restores the intended overall system functionality and module synchronization.

During this automatic restart, some functions may be temporarily unavailable. This automatic restart is a part of the system architecture.

No action is required.

1. Wait until the restart is complete.

5.4.2 Manual Defibrillation with corPatch Electrodes

When using corPatch electrodes, the ECG is obtained via the corPatch electrodes attached to the patient (indicated as DE). Via additionally attached ECG electrodes and the 4-pole ECG monitoring cable, further leads can be displayed in the configurable second curve field (see chapter 6.3 Monitoring ECG, page 108).



1. To start the manual defibrillation mode, press the **Manual** key.
2. Prepare the patient (see chapter 5.2 Preparing the Patient for Defibrillation, Cardioversion and Pacer Therapy, page 70).
3. Check the package of the corPatch electrodes for damage and check the expiry date.
4. Attach corPatch electrodes to the patient, as shown on the electrode package. Select the required energy level with the jog dial or via the softkeys and confirm by pressing the jog dial.



5. To start the charging process, press the **Charge** key.
   The charging process takes approximately 5 seconds depending on the selected energy setting. During the charging process, the rising pitch of the charging tone (configurable by the user OPERATOR) indicates the progress of charging acoustically and serves as a warning to bystanders.
6. Wait until the message "`Ready for shock`" or "`Press and hold down Shock key`" is displayed on the screen and the ready-signal is sounding. The device is ready for releasing a defibrillation shock.



7. Hold down the **Shock** key until the shock is delivered to perform defibrillation or cardioversion.
8. If the shock has been released successfully, the message `Shock performed` is shown. Afterwards, a shock protocol is printed automatically, if configured by the user OPERATOR.
9. Continue with the standardised or locally valid resuscitation protocol. If the option "Reminder Man." is configured by the operator, the message "`Assess heart rhythm`" appears 2 or 3 minutes after readiness for shock ended.
10. To reset the CPR timer (starting the CPR cycle again), press the softkey [Cont.CPR].

Note With the introduction of the corPatch easy therapy electrodes (for adult patients P/N 04324.3, P/N 05120.1, P/N 05120.4 and P/N 05120.5 and for paediatric patients P/N 05120.3 and P/N 05120.2), the higher limits for the body weight of patients have been set. The operational safety as well as medical effectiveness of the therapy electrodes is guaranteed.

Note The CPR rhythm can be supported acoustically by activating the metronome via the softkey [Metronome].

Note If the jog dial is pressed in manual defibrillation mode, the energy selection at the monitoring unit is only possible via the softkeys. Press the **Manual** key again, to be able to select the energy level with the jog dial.

Note The selected energy level is available for 30 seconds after charging. If no shock has been generated during this time, the device is discharged internally.

5.4.3 Manual Defibrillation and Cardioversion with Shock Paddles

When using shock paddles, the ECG is obtained via the shock paddles pressed to the patient's thorax (indicated as DE). Via additionally attached ECG electrodes and the 4-pole ECG monitoring cable, further leads can be displayed in the configurable second curve field (see chapter 6.3 Monitoring ECG, page 108).

Note Obtaining the ECG via the ECG electrodes and the 4-pole ECG monitoring cable (as explained in the following) assures a better signal quality than via the shock paddles.

Manual

1. To start the manual defibrillation mode, press the **Manual** key.
2. Prepare the patient (see chapter 5.2 Preparing the Patient for Defibrillation, Cardioversion and Pacer Therapy, page 70).
3. Place all four ECG electrodes of the 4-pole ECG monitoring cable on the patient (see chapter 6.3 Monitoring ECG, page 108).
4. Completely wet the electrode surfaces of the shock paddles with defibrillation electrode gel.
5. Select the required energy level with the jog dial or via the softkeys and confirm by pressing the jog dial.
6. To start the charging process, briefly press one of the shock paddle buttons and release.
   The charging process takes approximately 5 seconds depending on the selected energy setting. If enabled, the rising pitch of the charging tone indicates the progress of charging acoustically and serves as a warning to bystanders.
7. Wait until the message "**`Ready for shock`**" or "**`Press and hold down Shock key`**" is displayed on the screen and the ready-signal is sounding. The device is ready for releasing a defibrillation shock.
8. Place the APEX shock paddle (Fig. 5-10, item 1) on the lower left of the thorax beside apex of the heart (5th ICS).
9. Place the STERNUM shock paddle (Fig. 5-10, item 2) to the right of the sternum.

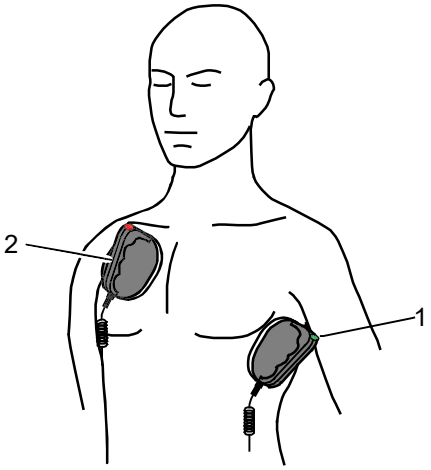

Fig. 5-10 Applying the shock paddles

1 Position of the APEX shock paddle
2 Position of the STERNUM shock paddle

Performing a defibrillation/ cardioversion

10. Hold down both shock paddle buttons until a shock has been released. By pressing the shock paddle buttons a confirmative tone sounds.
11. If the shock has been released successfully, the message `Shock performed` is shown. Afterwards, a shock protocol is printed automatically, if configured by the user OPERATOR.
12. The message `Shock not recommended` indicates that the defibrillation cannot be performed and that the buttons at the shock paddles are locked.
13. Continue with the standardised or locally valid resuscitation protocol. If the option "Reminder Man." is configured by the operator, the message "`Assess heart rhythm`" appears 2 or 3 minutes after readiness for shock ended.
14. To reset the CPR timer (starting the CPR cycle again), press the softkey [Cont.CPR].

Energy selection via the shock paddle buttons

By short circuiting the shock paddles the energy selection via the shock paddle buttons is enabled. This function enables the energy selection with the jog dial in 5 J increments. With the baby shock electrodes attached, this energy selection is not possible.

Warning

Risk of electrical shock

Make sure that no defibrillation electrode gel gets into the insulation area between the electrode surface and the handle.

Only use defibrillation electrode gel intended for this purpose.

Warning

Ineffective shock therapy

For an effective shock release, a pressure of approx. 8 kg is necessary in adult patients. Press the shock paddles firmly onto the patient's thorax when the shock is triggered.

Keep both shock paddle buttons depressed until the shock is delivered.

Note If the paddles have not been used for some time, the paddle buttons have to be pressed repeatedly.

Note The CPR rhythm can be supported acoustically by activating the metronome via the softkey [Metronome].

Note If the jog dial is pressed in manual defibrillation mode, the jog dial is blocked and the energy selection at the monitoring unit is only possible via the softkeys. Press the **Manual** key again, to be able to select the energy level with the jog dial.

Note The selected energy level is available for 30 seconds after charging. If no shock has been generated during this time, the device is discharged internally.

Note For safety reasons, when using shock paddles, the keys **Charge** and **Shock** on the monitoring unit are blocked. The charging and release of the defibrillation shock can only be triggered via the shock paddle buttons.

Note Energy selection can be performed by connecting both electrode surfaces of the shock paddles (short-circuiting). To decrease the energy, briefly press the APEX shock paddle button. To increase the energy, briefly press the STERNUM shock paddle button.

5.4.4 Manual Defibrillation and Cardioversion with Shock Spoons

Warning

Before using the shock spoons, read and understand the safety and preparation notices in the manual (P/N 04137.02).

When using shock spoons, the ECG is obtained via the shock spoons pressed to the patient's heart. It is, however, recommended to obtain the ECG via the 4-pole ECG monitoring cable (see chapter 6.3 Monitoring ECG, page 108).

Note Obtaining the ECG via the ECG electrodes and the 4-pole ECG monitoring cable (as explained in the following) assures a better signal quality than via the shock paddles.

Note When using shock spoons, the energy available is limited by the device to a maximum of 50 J.

Manual

1. To start the manual defibrillation mode, press the **Manual** key.
2. Place all four ECG electrodes of the 4-pole ECG monitoring cable on the patient (see chapter 6.3 Monitoring ECG, page 108).
3. Screw sterile shock spoons of the correct size into the sterile shock spoon holders.
4. Select the required energy level with the jog dial or via the softkeys and confirm by pressing the jog dial.

Charge

5. To start the charging process, press the **Charge** key.
   The charging process takes approximately 5 seconds depending on the selected energy setting. If enabled, the rising pitch of the charging tone indicates the progress of charging acoustically and serves as a warning to bystanders.
6. Wait until the message "`Ready for shock`" or "`Press and hold down Shock key`" is displayed on the screen and the ready-signal is sounding. The device is ready for releasing a defibrillation shock.



7. Hold down the **Shock** key until the shock is delivered to perform defibrillation or cardioversion.
8. If the shock has been released successfully, the message `Shock performed` is shown. Afterwards, a shock protocol is printed automatically, if configured by the user OPERATOR.
9. Continue with the standardised or locally valid resuscitation protocol. If the option "Reminder Man." is configured by the operator, the message "`Assess heart rhythm`" appears 2 or 3 minutes after readiness for shock ended.
10. To reset the CPR timer (starting the CPR cycle again), press the softkey [Cont.CPR].

Note If the jog dial is pressed in manual defibrillation mode, the energy selection at the monitoring unit is only possible via the softkeys. Press the **Manual** key again, to be able to select the energy level with the jog dial.

Note The selected energy level is available for 30 seconds after charging. If no shock has been generated during this time, the device is discharged internally.

5.4.5 Manual Defibrillation and Cardioversion of Neonates and Children



Warning

Ineffective shock therapy

With the baby shock electrodes the defibrillation energy is automatically reduced. The energy reduction is effected at a ratio of 1:10, i.e. one tenth of the energy set in defibrillation mode.

If, for example, an energy level of 200 J is selected, the shock is released with an energy of just 20 J.

Defibrillation electrodes

For the defibrillation and cardioversion of neonates and children, various types of defibrillation electrodes are available:

- Baby shock electrodes (as adapters for shock paddles, up to 5 kg body weight maximum)
- corPatch easy electrodes Pediatric and paediatric
- corPatch easy electrodes for adults
- corPatch easy electrodes pre-connected

corPatch easy electrodes paediatric

When using corPatch easy electrodes Pediatric and paediatric, the energy available is limited by the device to a maximum of 100 J.

Warning

Insufficient defibrillation energy

When using corPatch easy electrodes Pediatric and Pediatric Extended, the maximum available energy of 100 J, depending on the weight of the patient, can be insufficient.

Use defibrillation electrodes suitable for the weight of the patient.

Connecting baby shock electrodes

1. Fit the baby shock electrodes (item 2) onto the shock paddles (item 1) and press until the curved edge engages perceptibly.

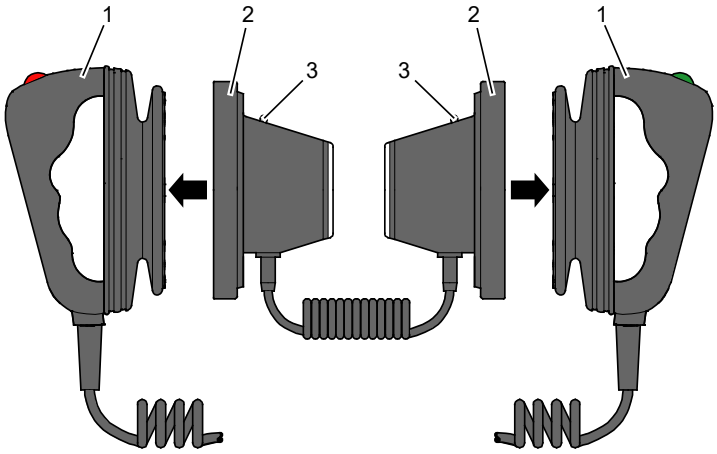

Fig. 5-11 Connecting baby shock electrodes

1 Shock paddles for adults
2 Baby shock electrodes
3 Diode for functional test

2. Perform a functional test: Trigger a 10 J shock with short-circuited baby shock electrodes. The two diodes (item 3) light up. If the diodes do not light up, check the connections and repeat the functional test.
3. Further procedure as described in chapter 5.4.3 Manual Defibrillation and Cardioversion with Shock Paddles, page 82.

Note If the shock is aborted while using baby shock electrodes, the message `Shock performed` might be shown.

Caution

Risk of electrical shock

Short-circuit the baby shock electrodes away from your body during the functional test.

5.5 External Pacer

5.5.1 Information on the External Pacer

Warning

Risk of inadequate therapy

The pacer must not be used as an intracardial defibrillator.

By electrical stimulation of the heart muscle, the external pacer of corpuls3 can supplement, positively influence or completely take over its function.

Applying the corPatch electrodes

The pacer emits pacing pulses to the patient's heart muscle via the corPatch electrodes attached to the thorax. The corPatch electrodes are placed in the anterior and posterior position in this case.

Different operating modes enable the user to adapt the treatment individually for each patient.

Access control to pacer mode

The user OPERATOR can block the access to the pacer mode by means of a PIN code. One has to make sure that the code is known to authorised users, as otherwise pacer therapy is not possible. By pressing the **Pacer** key the device activates the pacer mode:

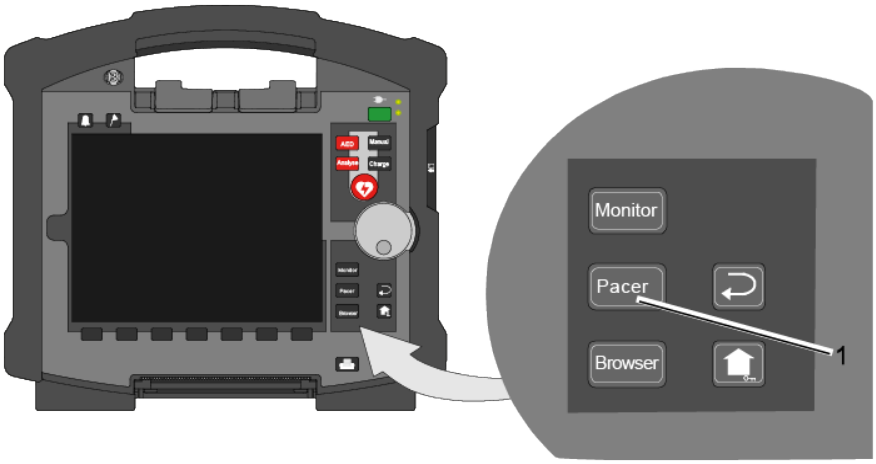

Fig. 5-12 Pacer function

1 Pacer key

Note Pulses of internal pacers are rejected by the device according to the information in Table A-17, page 305. In case of deviating waveforms, artefacts may occur in the ECG signal.

Note If the external pacer of the corpuls3 is pacing, the pulse rejection is broadened and the recognition of internal pacer pulses is limited.

Note For a reliable suppression of pacer impulses, the 4-pole ECG monitoring cable has to be used.

Note In lead DE no pacer recognition can be performed, because the ECG curve DE cannot display pacer spikes.

Note The corpuls simulator can be used for the daily and monthly function checks. For safety reasons, the corpuls simulator shows the DE lead in pacer mode and therefore is only partially suitable for the simulation of pacer therapy.

Warning

Risk of delayed therapy/Implanted pacer!

In patients with an implanted pacer, it is possible that shockable ECG rhythms or arrhythmias will only be detected to a limited extent.

Keep pacer patients under close surveillance. Check the pulse of the patient to make sure that the device does not measure the frequency of the implanted pacer.

Caution

Functional error due to interference

This may result in signal interference with the pacer.

The pacer function must not be used near high frequency surgical devices or microwave therapy devices.

Caution

Loss of important information

The patient must not remain unattended when using the external pacer.

The basic settings when using the device in pacer mode for the first time are:

- Intensity: 0 mA
- Frequency: 70/min
- Mode: DEMAND

Pacer pulse identification

The moment of stimulation is marked by a green vertical line (spike) in the ECG curves. A small lozenge symbol is located under each spike. In addition, a large lozenge symbol is flashing in the upper left corner of the curve field.

The lozenge symbol ♦ in the upper left corner indicates the stimulation impulse of an implanted pacer.

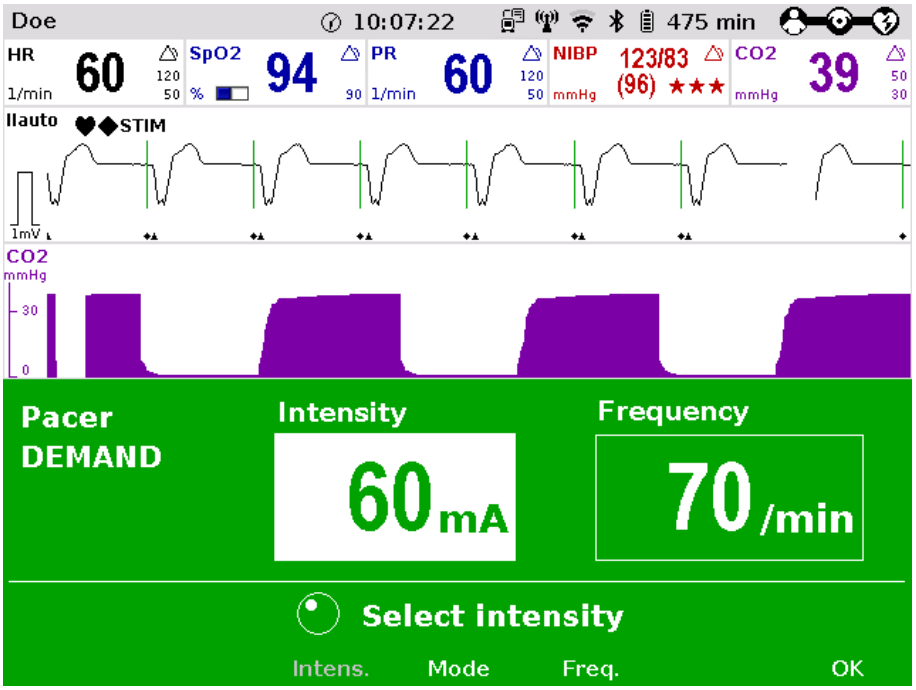

Fig. 5-13 Pacer pulse identification

Note Connecting and disconnecting ECG electrodes may lead to the detection of false-positive pacer pulses. If this occurs, the device briefly displays pacer pulses, although the patient does not have an implanted (internal) pacer.

Message "STIM" The pacer mode is indicated by the message "STIM" in the upper left corner of the curve field.

When stimulation is performed, the message "STIM" is flashing. When "STIM" is permanently displayed, the pacer is switched on (e. g. in DEMAND mode in a frequency range in which no stimulation is necessary), but is not active (no stimulation). Only when the pacer is switched off or paused, the message "STIM" is not displayed.

The pacer continues to operate in monitoring mode. If the user

- presses the **On/Off** key or
- switches to defibrillation mode

while the pacer is running, a confirmation prompt appears, warning that the pacer is active. Switching off the pacer or switching to defibrillation mode can be confirmed by pressing the softkey [OK] or aborted by pressing the softkey [Cancel].

Note As long as the pacer is active, the corpuls3 cannot be switched off or switch to defibrillator mode without a prior confirmation prompt.

The pacer can only be operated when corPatch electrodes are connected to the therapy master cable. The pacer is switched off automatically if a cable is removed while running in pacer mode.

Note If no ECG cable is connected to the patient box, the DEMAND mode cannot be selected. The confirmation prompt `Switch pacer to FIX mode?` appears.

Automatic System Supervision Function

The device is equipped with an automatic system supervision function that continuously detects and compensates for system deviations between internal modules.

If relevant inconsistencies are detected, that can't be resolved otherwise, the affected modules will restart automatically. This restores the intended overall system functionality and module synchronization.

During this automatic restart, some functions may be temporarily unavailable. This automatic restart is a part of the system architecture.

No action is required.

1. Wait until the restart is complete.

5.5.2 Preparing the pacer function



Warning

Risk of burn injuries

The pacer function and the ECG recording function are compromised if adhesion of the corPatch electrodes or ECG electrodes is impaired due to contaminated skin or excessive hair.

Note Only use corPatch electrodes indicated in the list of approved accessories. The corPatch electrodes must no longer be used after the expiry date indicated on the packaging has passed.

1. Prepare the patient (see chapter 5.2 Preparing the Patient for Defibrillation, Cardioversion and Pacer Therapy, page 70).
2. If necessary, prepare ECG monitoring (see chapter 6.3.3 Preparing ECG Monitoring, page 110).

If the pacer mode is called up for the first time, a picture and the message "`Recommended electrode placement`" appears. To close the message, press softkey [OK].

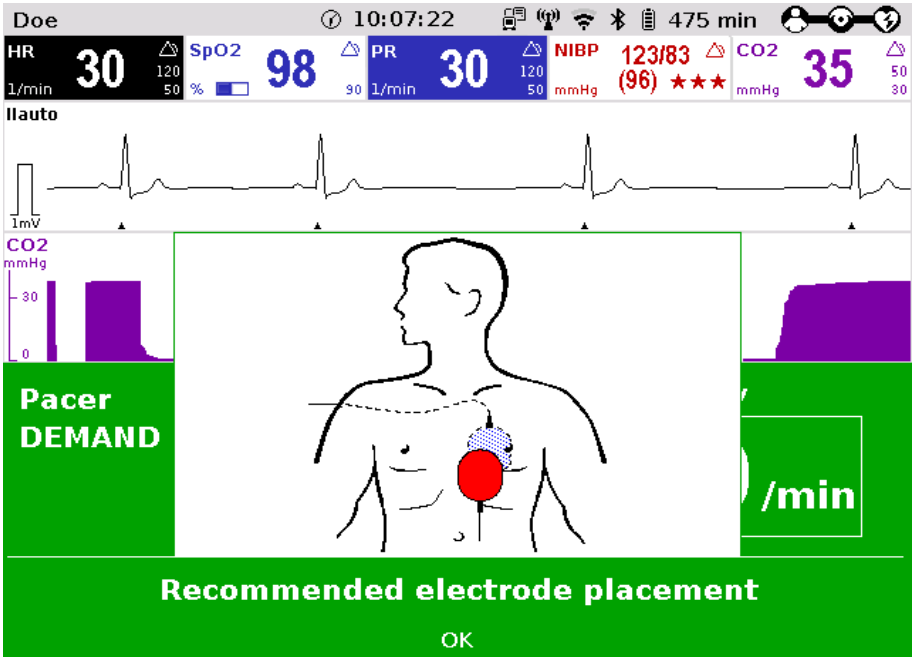

Fig. 5-14 Pacer, Recommended electrode `placement`

3. Place the blue-labelled corPatch electrode on the back beside the vertebral column beneath the shoulder blade (item 1).
4. Place the red-labelled corPatch electrode on the thorax at the level of the bottom third of the sternum (between 4th and 5th ICS) (item 2).
5. Connect the corPatch electrodes to the therapy master cable.

Caution

Less effective pacer therapy!

Pacer therapy with the corPatch electrodes in APEX/STERNUM position can be attempted. If this, however, has no effect on the heart rhythm of the patient, it is recommended to attach the corPatch electrodes in anterior/posterior position (if adhesion is still sufficient).

If necessary, use fresh corPatch electrodes.

DEMAND mode In DEMAND operating mode, pacing is only performed when the patient's own heart rate is below the pre-set pacing frequency.

Note In DEMAND mode, the ECG has to be obtained via ECG electrodes and the 4-pole ECG monitoring cable addition in to the corPatch electrodes.

If no valid ECG is present (e.g. because the 4-pole ECG monitoring cable is not connected to the patient box), an alarm is triggered, the pacer therapy stops and the confirmation request "`Switch pacer to FIX mode?`" appears. If the user confirms with the softkey [Yes], the therapy is continued in FIX mode. If the softkey [No] is pressed, the therapy remains paused. If the user does not react, the confirmation request disappears after 10 s and the pacer shows the initial screen. If within this time, a valid ECG is detected again, therapy is continued in DEMAND mode.

FIX mode In FIX operating mode, pacing is performed with a fixed frequency, regardless of the patient's own heart rate.

If the 4-pole ECG monitoring cable is not connected to the patient box, in mode FIX, the derivation DE is shown.

OVERDRIVE function With the OVERDRIVE function, a patient with a high-frequency cardiac rhythm is restored to a normal-frequency cardiac rhythm.

5.5.3 Starting the Pacer Function

Preparing the device

Prerequisite: Device is switched on and in manual mode.

Pacer

1. Press the **Pacer** key to run the pacer function.
   The following screen structure appears:

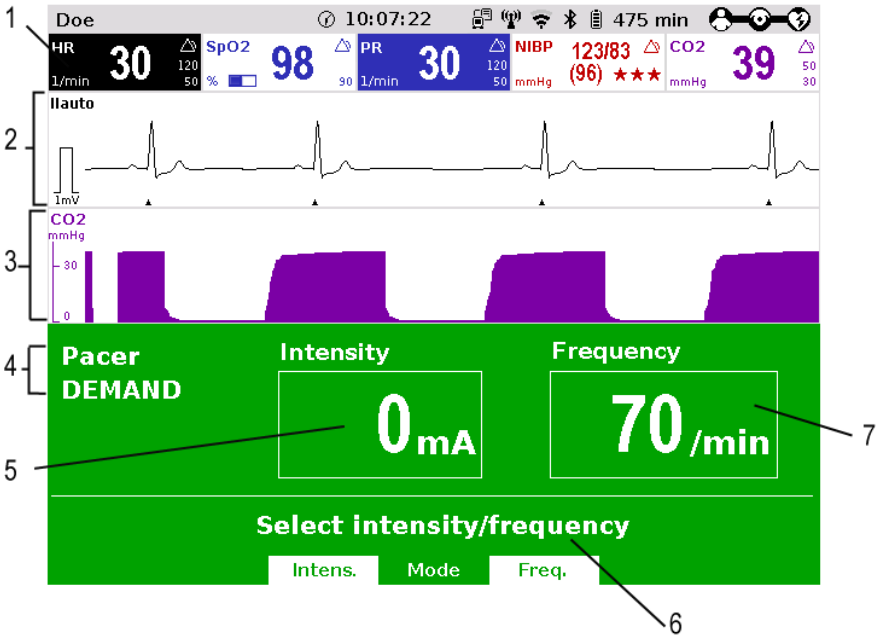

Fig. 5-15 Pacer, initial screen

1 Heart rate parameter field
2 Current ECG (derivation II/DEauto)
3 Configurable curve field
4 Pacer mode
5 Selected intensity
6 Operating instruction
7 Selected frequency

Note The pacer always starts in DEMAND operating mode.

Pacer mode FIX or DEMAND

1. If the operating mode FIX is indicated, press softkey [Mode]. If DEMAND operating mode is to be used, connect the ECG monitoring cable and continue with step 4.
2. Press the softkey [FIX] to select FIX operating mode.
3. Press the softkey [Freq.] and select the required frequency with the jog dial.
4. Press the softkey [Intens.] and select the required intensity with the jog dial.

Note The pacing frequency can be adjusted in 5/min increments within the range of 30/min to 150/min.

Note The pacing intensity can be adjusted from 0 to 10 mA and then in 5 mA increments up to 150 mA.

Warning

Risk of adverse therapeutic effect

Pacing begins automatically as soon as an intensity of more than 0 mA is selected.

Warning

Risk of inadequate therapy

Regularly check effectiveness of the pacer by checking the central pulse.

Warning

Risk of delayed therapy/Implanted pacer!

In patients with an implanted pacer, it is possible that shockable ECG rhythms or arrhythmias will only be detected to a limited extent.

Keep pacer patients under close surveillance. Check the pulse of the patient to make sure that the device does not measure the frequency of the implanted pacer.

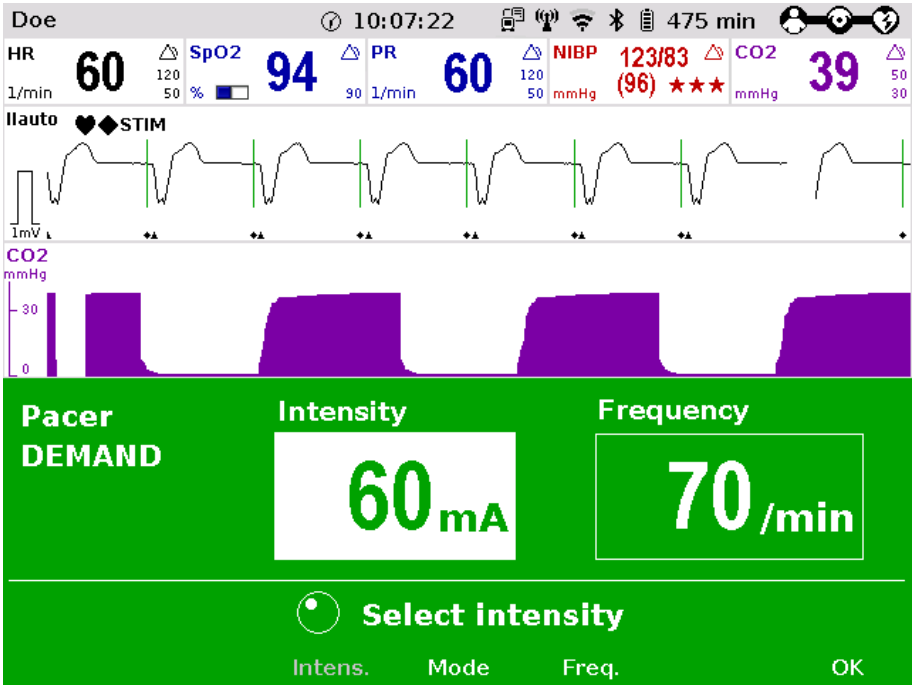

Fig. 5-16 Pacer, selecting the intensity

Pause pacing

If necessary, press the softkey [Pause] to interrupt pacing. Confirm with the question `Pause pacing?` with the softkey [Yes].

Cont. pacing

If pacing has been paused, press the softkey [Continue pacing] to continue pacing. Confirm with the question `Continue pacing?` with the softkey [Yes].

End pacing

To end the current pacing, press the softkey [Off]. Answer the confirmation prompt `Switch off pacer?` with the softkey [Yes] to end pacing and to reset the pacer (DEMAND, 0 mA, 70/min).

Warning

Risk of inadequate therapy

The procedure described below is a recommendation from the manufacturer. Qualified users will determine the progress of treatment on their own account.

Prerequisite:

- The DEMAND mode is called up,
- Heart rate is over 70/min
- ECG electrodes are attached and the ECG monitoring cable is connected.
- Appropriate therapy electrodes are connected.

OVERDRIVE function

1. Press the **Pacer** key to run the pacer function.
2. Press the softkey [Mode] to leave the operating mode DEMAND.
3. Press the softkey [OVR] to select the OVERDRIVE function. The pacing frequency will be automatically adjusted to a value just below the patient's frequency.
4. Press the softkey [Intens.] and select an intensity value between 60 and 100 mA.

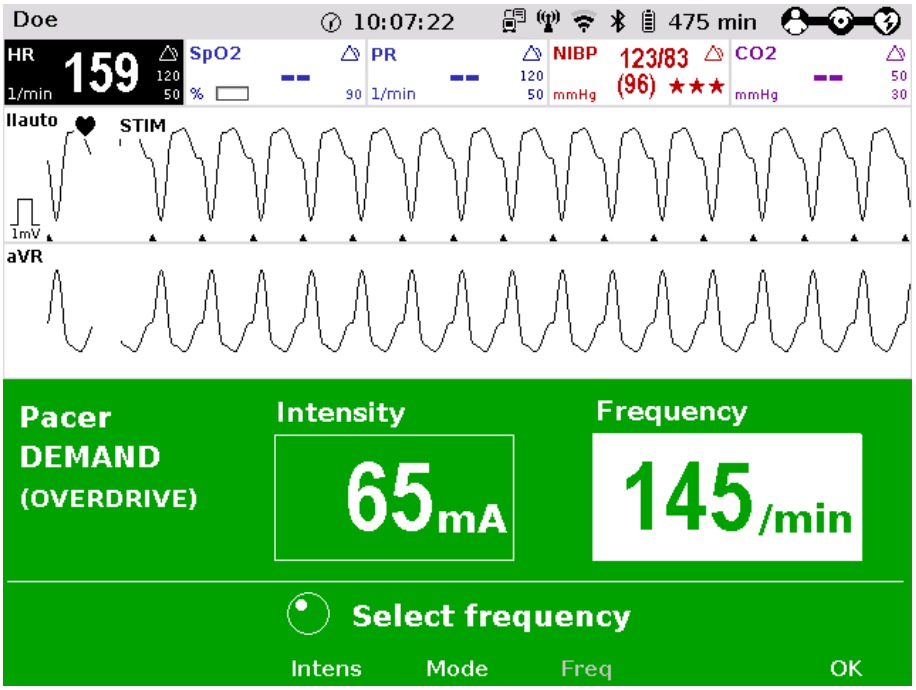

Fig. 5-17 Pacer, OVERDRIVE function

5. Press the softkey [Freq.] and gradually increase the frequency until the pacer stimulates regularly ("**STIM**" flashes in the curve field of lead II). Pacing only starts when the patient's heart rate is exceeded.
6. If the pacing pulses are not followed by a contraction of the heart muscle, press the softkey [Intens.] and increase the intensity until the stimulation threshold is reached and the heart rate permanently follows the pacing frequency.
7. Press the softkey [Freq.] and decrease the frequency until the required heart rate is achieved.
8. If necessary, repeat step 6 and 7.

Pause pacing

If necessary, press the softkey [Pause] to interrupt pacing. Confirm with the question **`Pause pacing?`** with the softkey [Yes].

Cont. pacing

If pacing has been paused, press the softkey [Continue pacing] to continue pacing. Confirm with the question **`Continue pacing?`** with the softkey [Yes].

End pacing

To end the current pacing, press the softkey [Off]. Answer the confirmation prompt **`Switch off pacer?`** with the softkey [Yes] to end pacing and to reset the pacer (DEMAND, 0 mA, 70/min).



Warning

Risk of inadequate therapy

Regularly check effectiveness of the pacer by checking the central pulse.



Warning

Risk of delayed therapy

If the defibrillator/pacer battery enters a low state of charge in pacer mode while the modules are being operated separately from one another, a alarm message "Battery low" appears on the screen.

If the defibrillator/pacer battery is almost completely discharged and the defibrillator/pacer will soon switch off, the alarm message “Check pacer” appears.

In both cases, immediately connect the modules mechanically or connect the defibrillator/pacer to a mains power supply.



Warning

Risk of delayed therapy

If the monitoring unit loses the network connection in pacer mode due to the defibrillator/pacer being out of range, this will be indicated visually and acoustically on the screen and by the alarm message “Check pacer”. Pacing will be continued, but pacer alarms and errors cannot be displayed. In this case, the modules must be brought immediately within an adequate range or reconnected mechanically.



Warning

Risk of electrical shock

All four ECG electrodes of the 4-pole ECG monitoring cable must be connected to the patient.

If the electrodes of the complementary 6-pole ECG diagnostic cable are to be used additionally, all 6 electrodes must be connected to the patient and the connector must be plugged into the patient box. No electrode must be left unattached.

For safety reasons, if a defibrillation is performed with shock paddles, it is not permitted that the complementary 6-pole ECG diagnostic cable is pre-connected to the patient box and none of the electrodes are attached.



Caution

Possible delayed therapy

Do not operate the defibrillator/pacer module out of range of the monitoring unit/patient box. If switching to another therapy mode is not possible, bring the modules into radio range or connect them mechanically.

Note To avoid unintentional switching off of the defibrillator/pacer, the **On/Off** key has to be held down for at least 3 seconds for switching off.

Note If the battery on the monitoring unit is replaced during operation in pacer mode, the pacer has to be called up again.

5.6 Metronome

5.6.1 Information on the Metronome

The corpuls3 comes with a metronome (smartMetronome) that supports the user acoustically during CPR. Configurations of the metronome are set according to the current scientific recommendations of international associations for resuscitation.

Autostart Metronome

The user OPERATOR can configure that the metronome is started automatically when a therapy mode is called up. This setting can be configured separately for the AED- and for the manual mode (see chapter 7.4.12 Configuration of the Metronome and CPR feedback (Persons Responsible for the Device), page 190).

The corpuls3 emits a series of compression- and ventilation tones (configurable) via the speakers. The tone sequence signals to the user in what rhythm to perform thorax compressions and when to perform ventilation.

There are three different tone signals:

- Compression tone
- Ventilation tone
- Reminder tone for ventilation (Cont. vent.)

Compression tone

The compression tone consists of a rhythmic tone sequence. Thorax compressions should follow this. To signal the upcoming ventilation phase, the five last compression tones of the sequence are higher pitched than the preceding ones.

Ventilation tone

The ventilation tone consists of two tone sequences which are signalling the inhalation and exhalation. The ventilation tone is signalled twice in a row.

Reminder tone for ventilation

The operator can configure the reminder tone for the modes "Adult cont." and "Child cont.". The reminder tone is issued dependant on the ventilation rate configured by the operator (Off; 8/min to 20/min in 1/min increments.

Note

The factory settings of the metronome are configured at 100 thorax compressions per minute. This value can be altered by the person responsible for the device (see chapter 7.4.12 Configuration of the Metronome and CPR feedback (Persons Responsible for the Device), page 190).

Metronom settings

The metronome has the following 6 settings that can be selected in defibrillation mode via the softkey context menu:

Metronome modes		Explanation
Off		The metronome is deactivated.
Adult 30:2		Standard resuscitation protocol for adults Proportion: 30 thorax compressions; 2 ventilations.
Adult cont.	Reminder tone for ventilation (Cont. vent.)	Continuous thorax compressions in adults, (e. g. if patient is intubated)
Child 30:2		Standard resuscitation protocol for children Proportion: 30 thorax compressions; 2 ventilations.
Child 15:2		Standard resuscitation protocol for children Proportion: 15 thorax compressions; 2 ventilations.
Child cont.	Reminder tone for ventilation (Cont. vent.)	Continuous thorax compressions in children, (e. g. if patient is intubated)

Table 5-2 Metronome modes

5.6.2 Starting the Metronome

Preparing the device

Prerequisite: The device is in AED- or manual defibrillation mode.

1. Press the softkey [Metronome] repeatedly until the required mode is selected.

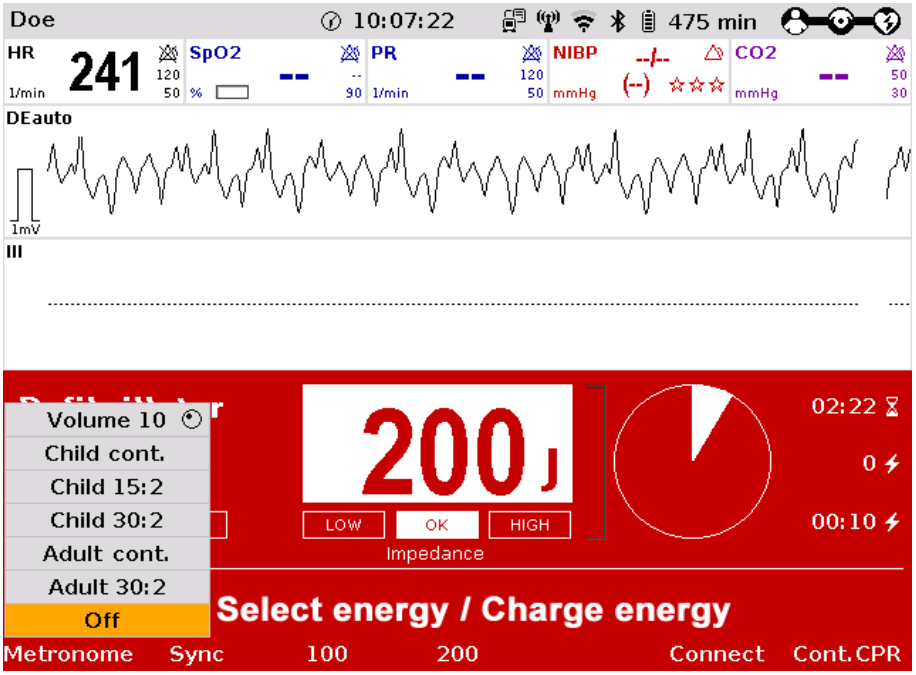

Fig. 5-18 Softkey context menu metronome

2. To change the volume of the metronome signals, mark the field "Volume" and confirm by pressing the jog dial.
3. Select the required volume by turning the jog dial.
4. To confirm the settings and close the configuration dialogue, press the jog dial.

Note If the user switches to monitoring mode during CPR, the metronome function stays active. The metronome can be deactivated via the softkey [Metr. off].

Note The QRS-/pulse tone is deactivated automatically when the metronome function is active.

Warning

Risk of delayed therapy

The metronome pauses at reaching readiness for shock in AED or manual defibrillation mode.

After the shock has been released or 10 s after readiness for shock without releasing the shock, the metronome resumes signalling the compression tone.

Caution

Risk of delayed therapy

During ECG analysis in AED mode the metronome pauses. If subsequently no shock is recommended, the metronome resumes signalling the compression tone.

Caution

Risk of delayed therapy

By selecting the pacer mode, the metronome is deactivated.

5.7 CPR feedback

5.7.1 Information on CPR Feedback (Devices up to 2022-06-11)

If a corPatch CPR sensor is used, the rate and depth of a thorax compression can be measured by the corpuls3. During resuscitation, the users are provided important information on the quality of the current thorax compressions, so that they can react immediately and take corresponding measures.

Among the information are the display of the current rate as well as the curve progression of the current thorax compressions. Speech- and text messages, as well as the colour of the bars in the CPR curve signal to the user whether the quality of the thorax compressions is sufficient (green bars) or can be optimised (red bars).

For this, three different speech- and text messages are available:

- "**Push harder**"
- "**Good compressions**"
- "**Fully release**"

The speech- and text message "**Push harder**" is played, if the recommended depth of the thorax compressions has not been reached. It is repeated at an interval of 7 seconds until the recommended depth of the thorax compressions has been reached or exceeded and the speech- and text message "**Good compressions**" is played. In addition, if the compression depth has not been reached, the speech- and text message "**Fully release**" is played to remind the user to release the thorax. It can be deactivated in the configuration dialogue "Defib - CPR Feedback". The message "**Fully release**" is played as a reminder for re-calibration of the sensor.

Message "Fully release"

The user OPERATOR can deactivate the spoken message "**Fully release**" (see chapter 7.4.12 Configuration of the Metronome and CPR feedback (Persons Responsible for the Device), page 190).

Speech- and text messages will not be played, if

- the metronome is in ventilation phase,
- during the ECG analysis in AED mode,
- the device is ready to shock or
- the resuscitation is finished.

corPatch CPR summary (printout)

After deployment of the corPatch CPR feedback sensor the corpuls3 calculates and stores a statistical evaluation from the collected data. If the user OPERATOR has enabled this option (see chapter 7.4.12 Configuration of the Metronome and CPR feedback (Persons Responsible for the Device), page 190), the corPatch CPR summary can be printed out on the corpuls3 via the main menu or the mission browser and so allows a direct mission debriefing for users. The printout contains various quality parameters and graphical summaries of the respective resuscitation mission.

If necessary, the used measuring unit can also be adjusted in the context menu or the configuration dialogue.

Note The CPR Feedback system is available in AED and manual defibrillation mode as well as in monitoring mode (configurable).

Note The use of CPR feedback is not recommended for patients with a body weight below 20 kg.

Note The CPR feedback was available in devices from May 2013 until 2022-06-11. Older devices could be retrofitted. For further information, please contact your authorised sales and service partner.

Note The CPR self-test (accessible at user level Operator) only checks the functionality of the CPR module, not that of the CPR sensor or the CPR intermediate cable.

Note The corPatch CPR sensor is a disposable article.

Note The corPatch CPR sensor is covered under one or more of the following U.S.A. patents: 7,074,199; 7,108,665; 7,429,250; 8,147,433; 7,220,235.

Warning

Risk of electrical shock

To guarantee a defibrillation protection for patients, users and third parties, exclusively use the accessories indicated in the list "Authorised Accessories".

Caution

Risk of inadequate therapy

The thorax compressions are also represented in green if they exceed the recommended depth.

Caution

Risk of inadequate therapy

The detection of the rate and depth of the thorax compressions can be compromised by vibrations.

Caution

Risk of inadequate therapy

Do not use corPatch CPR sensors if

- the packaging is damaged or opened;
- the expiry date indicated on the packaging has passed;
- the sensor is damaged.

Caution

Risk of skin irritation

Used corPatch CPR sensors have to be replaced by a new corPatch CPR sensor after 24 hours at the latest, to avoid side effects such as reddening and skin irritation.

Caution

Risk of inadequate therapy

The patient's condition has to be assessed by the users themselves, independent of the CPR feedback.

Warning

Risk of inadequate therapy

During the phase between compressions, the user has to make sure that the pressure is completely relieved from the thorax. Otherwise, there can be false-negative feedback.

5.7.2 Preparing CPR Feedback (Devices up to 2022-06-11)

How to handle the corPatch CPR sensor is described in the following.

1. Connect the corPatch CPR sensor (item 1) to the corPatch CPR intermediate cable (item 2) leading to the patient box.

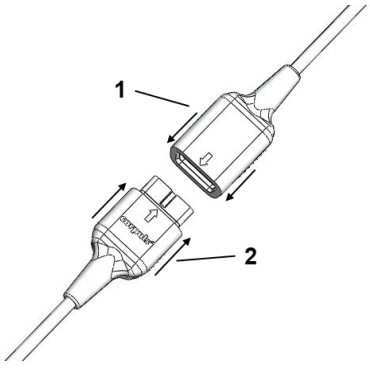

Fig. 5-19 Connecting the corPatch CPR sensor to the corPatch CPR intermediate cable

2. Tear open the package of the corPatch CPR sensor along the markings.
3. Remove the protective foil from the corPatch CPR sensor, so that the corPatch CPR sensor can be attached to the patient's thorax as shown in the illustration.

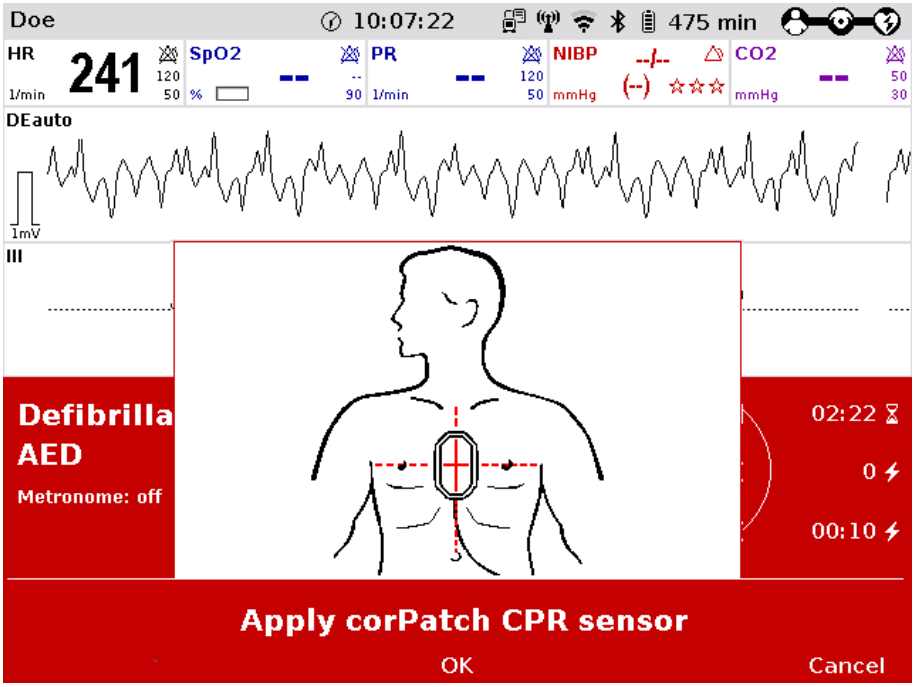

Fig. 5-20 CPR feedback, attaching the corPatch CPR sensor

5.7.3 Working with CPR Feedback (Devices up to 2022-06-11)

Prerequisite: Device is switched on and in manual mode.

The CPR feedback system starts automatically when the corPatch CPR sensor is applied. A picture and a message appear, showing the recommended position of the corPatch CPR sensor (see Fig. 5-20). To close the message, press softkey [OK]. The display of the application help can be disabled by the user OPERATOR.

1. If necessary, select a curve field for displaying the compression progression (CPR) and call up the curve context menu.
2. Assign the CPR curve to the selected curve field.
3. If necessary, select a parameter field for displaying the CPR rate and call up the parameter context menu.
4. Assign the CPR rate to the selected parameter field.

5. If necessary, select in the main menu "Defib" ► "CPR" and further adjust the configurations of the CPR Feedback system.

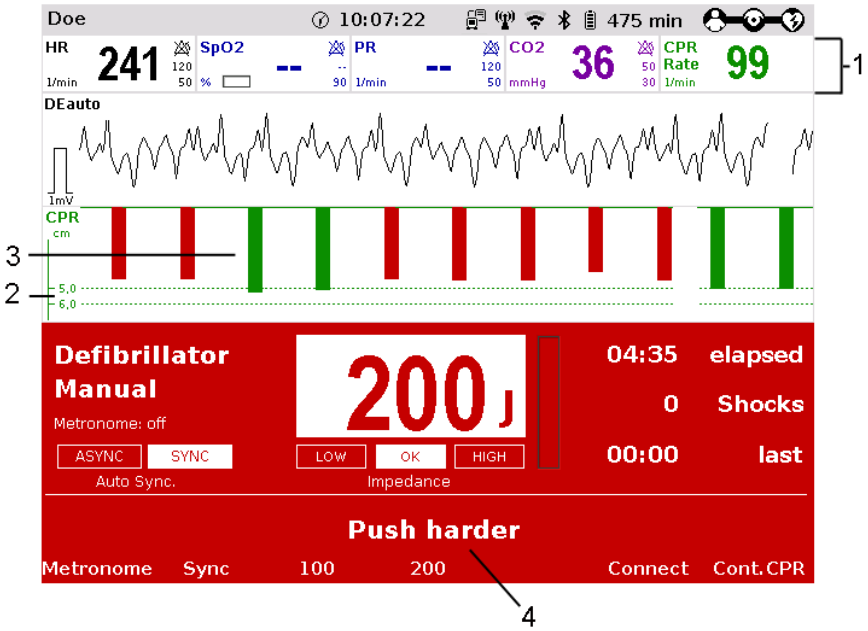

Fig. 5-21 CPR Feedback corPatch CPR sensor

1 Parameter field CPR rate
2 Reference range of compression depth
3 Curve field CPR
4 Operating instruction

Note If necessary, the used measuring unit and the reference range of compression depth (Standard or Reduced) can be adjusted in the curve context menu. The measuring unit can also be adjusted in the configuration dialogue.

Note Outside the specified measuring range (70/min - 150/min) the CPR rate displays invalid values: two dashes in the parameter field and a dashed line in the curve field.

Caution

Risk of inadequate therapy

The thorax compressions are also represented in green if they exceed the recommended depth.

Caution

Risk of inadequate therapy

The detection of the rate and depth of the thorax compressions can be compromised by vibrations.

Warning

Risk of inadequate therapy

During the phase between compressions, the user has to make sure that the pressure is completely relieved from the thorax. Otherwise, there can be false-negative feedback.

5.7.4 corPatch CPR summary (Devices up to 2022-06-11)

A retrospective CPR evaluation can be printed out on the corpuls3 via the mission browser. The printout contains various quality parameters and graphical summaries of the respective resuscitation mission.

The option can be disabled by the user OPERATOR.

5.7.5 Information on primeCPR Feedback

If a primeCPR sensor is used, the rate and depth of a thorax compression can be measured by the corpuls3. During resuscitation, the users are provided important information on the quality of the current thorax compressions, so that they can react immediately and take corresponding measures.

Among the information are the display of the current rate as well as the curve progression of the current thorax compressions. Speech- and text messages, as well as the colour of the bars in the CPR curve signal to the user whether the quality of the thorax compressions is within or outside the target range (green bars - within target range, red bars - to shallow, yellow bars - too deep).

For this, three different speech- and text messages are available:

- "**Push harder**"
- "**Good compressions**"
- "**Fully release**"

The speech- and text message "**Push harder**" is played, if the recommended depth of the thorax compressions has not been reached. It is repeated at an interval of 6 seconds until the recommended depth of the thorax compressions has been reached or exceeded and the speech- and text message "**Good compressions**" is played. In addition, if the compression depth has not been reached, the speech- and text message "**Fully release**" is played to remind the user to release the thorax. It can be deactivated in the configuration dialogue "Defib - CPR Feedback".

Message "Fully release"

The user OPERATOR can deactivate the spoken message "Fully release" (see chapter 7.4.12 Configuration of the Metronome and CPR feedback (Persons Responsible for the Device), page 190).

Speech- and text messages will not be played, if

- the metronome is in ventilation phase,
- during the ECG analysis in AED mode,
- the device is ready to shock or
- the resuscitation is finished.

primeCPR summary (printout)

After deployment of the primeCPR sensor the corpuls3 calculates and stores a statistical evaluation from the collected data. If the user OPERATOR has enabled this option (see chapter 7.4.12 Configuration of the Metronome and CPR feedback (Persons Responsible for the Device), page 190), the summary can be printed out on the corpuls3 via the main menu or the mission browser and so allows a direct mission debriefing for users. The printout contains various quality parameters and graphical summaries of the respective resuscitation mission.

If necessary, the used measuring unit can also be adjusted in the context menu or the configuration dialogue.

Note For patients with a body weight of under 25 kg, the use of the primeCPR feedback sensor (P/N 04235.4) is not recommended.

Note The CPR Feedback system is available in AED and manual defibrillation mode as well as in monitoring mode (configurable).

Note The primeCPR feedback system will be available in devices as of January 2023. At least software version REL-4.3.0 is needed. Older devices can be retrofitted. For further information, please contact your authorised sales and service partner.

Note The CPR self-test (accessible at user level OPERATOR) only checks the functionality of the primeCPR feedback module, not that of the primeCPR sensor.



Warning

Risk of electrical shock

To guarantee a defibrillation protection for patients, users and third parties, exclusively use the accessories indicated in the list "Authorised Accessories".

Caution

Risk of inadequate therapy

The detection of the rate and depth of the thorax compressions can be compromised by vibrations.

Caution

Risk of inadequate therapy

The patient's condition has to be assessed by the users themselves, independent of the CPR feedback.

Warning

Risk of inadequate therapy

During the phase between compressions, the user has to make sure that the pressure is completely relieved from the thorax. Otherwise, there can be false-negative feedback.

5.7.6 Preparing primeCPR Feedback

A compatible primeCPR sensor has to be used with the primeCPR feedback system. Only use sensors indicated in the list of approved accessories (see chapter 10.8 Approved Accessories, Spare Parts and Consumables, page 242).
When using the primeCPR feedback sensor (P/N 04235.4), read the separate user manual (P/N 04230.02) or Appendix P. When using other sensors, read the pertaining user manual.

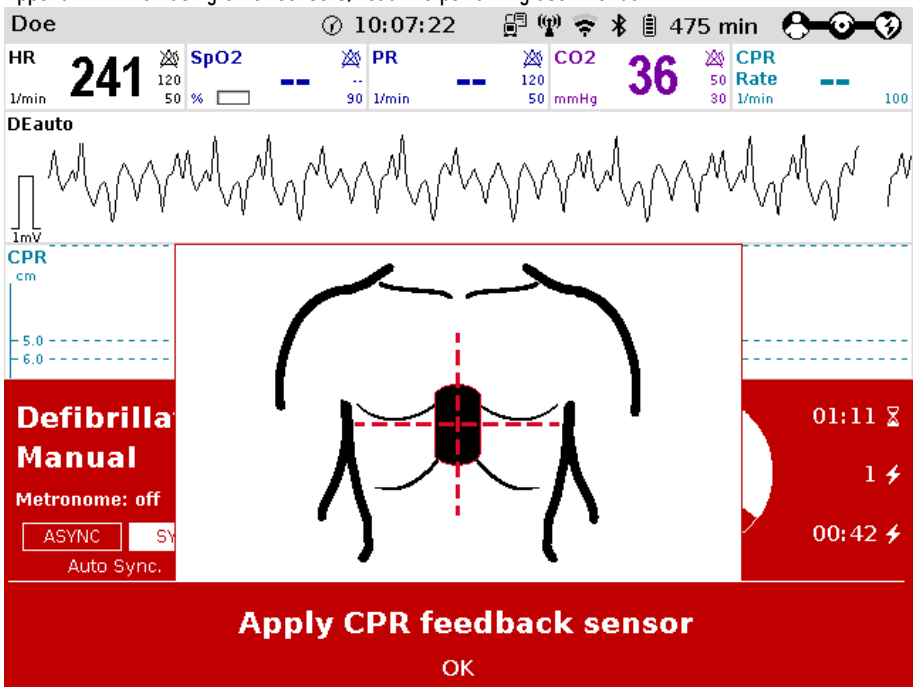

Fig. 5-22 Pictogram for applying the primeCPR sensor

5.7.7 Working with CPR Feedback

Prerequisite: The device is switched on and in monitoring mode, AED- or manual defibrillation mode at least the parameter curve „CPR“ or the parameter field „CPR Rate“ is displayed (configurable).

The CPR feedback system starts automatically when the primeCPR sensor is applied. If the option is installed and the device is in AED- or manual defibrillation mode, but the sensor is not connected or is not applied to the patient, a pictogram and an application note appear, prompting the user to apply the feedback system.

Fig. 5-22 shows the recommended placement of the primeCPR sensor. To close the message, press softkey [OK]. The display of the application help can be disabled by the user OPERATOR.

1. If necessary, select a curve field for displaying the compression progression (CPR) and call up the curve context menu. Assign the CPR curve to the selected curve field.
2. If necessary, select a parameter field for displaying the CPR rate and call up the parameter context menu. Assign the CPR rate to the selected parameter field.
3. If necessary, select in the main menu "Defib" ► "CPR" and further adjust the configurations of the CPR Feedback system.

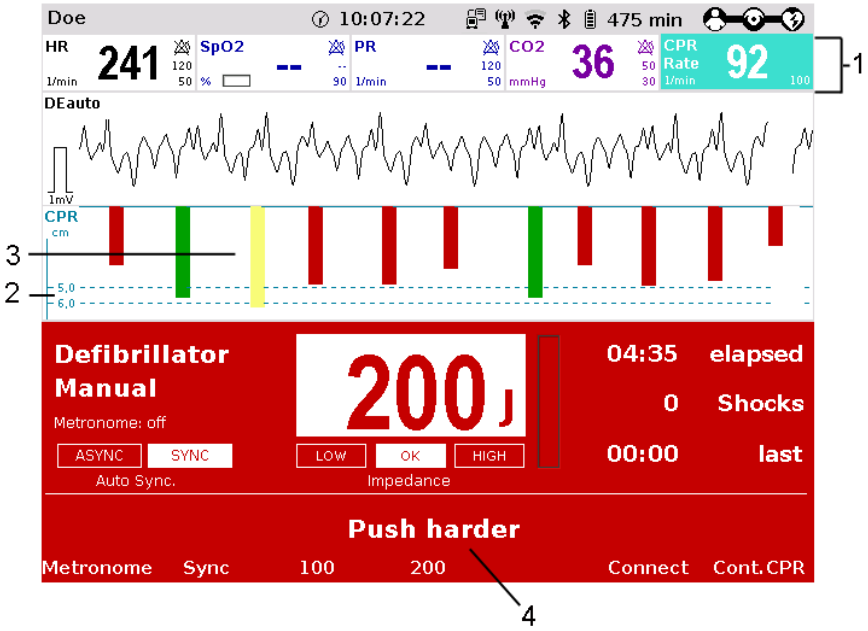

Fig. 5-23 CPR feedback

1 Parameter field CPR rate
2 Reference range of compression depth
3 Curve field CPR
4 Operating instruction

Curve field In the curve field, red, yellow and green bars are displayed corresponding to the compression depth. Red bars signify that the user performs too shallow compressions. Green bars signify that the user performs compressions within the target range. Yellow bars signify that the user performs too deep compressions. The range of compression depth can be selected via the curve context menu for adults and children separately.

Target rate The target rate (Fig. 5-24, item 3) is the metronome rate configured by the user OPERATOR (see chapter 7.4.12 Configuration of the Metronome and CPR feedback (Persons Responsible for the Device), page 190).



Fig. 5-24 Parameter field CPR rate

1 Compression rate
2 Target rate

Inverted field In case of a deviation of ±5 compressions per minute (1/min) from the target rate, the parameter field will be inverted (see Fig. 5-24).

Note If necessary, the used measuring unit and the reference range of compression depth (Standard or Reduced) can be adjusted in the curve context menu. The measuring unit can also be adjusted in the configuration dialogue.

Outside the specified measuring range (1/min - 160/min) the CPR rate displays invalid values: two dashes in the parameter field and a dashed line in the curve field.

Caution

Risk of inadequate therapy

The detection of the rate and depth of the thorax compressions can be compromised by vibrations.

Warning

Risk of inadequate therapy

During the phase between compressions, the user has to make sure that the pressure is completely relieved from the thorax. Otherwise, there can be false-negative feedback.

5.7.8 primeCPR summary

A retrospective CPR evaluation can be printed out on the corpuls3 via the mission browser. The printout contains various quality parameters and graphical summaries of the respective resuscitation mission.

The option can be disabled by the user OPERATOR.

5.7.9 preShock CPR

The user OPERATOR (person responsible for the device) can configure a preShock CPR phase (see chapter 7.4.4 Configuration of the Defibrillation Function (Persons Responsible for the Device), page 179). With this functionality, the user can perform a certain amount of compressions after AED analysis (if a shockable rhythm was detected) before the defibrillation shock is released.

Thereby the preShock pause is shortened and the chances for success of the shock are increased.

The prompt for preShock CPR is only visual.

Note As soon as the charging process is finished the defibrillator signals readiness to shock by issuing the ready-signal.

The user has to perform the configured number of compressions until the defibrillator prompts the shock release.

Note If there is a connection between the corpuls3 and the corpuls cpr the preShock CPR phase is always 8 s, independent of how long the preShock CPR phase has been configured by the operator.

Note The preShock CPR phase should not be interrupted.

Warning

Risk of electrical shock

Before releasing the shock, make sure that there is no risk for users or third parties. Electrical shock from defibrillator use can lead to arrhythmias, ventricular fibrillation or asystole.

5.8 Display of corpuls cpr Parameters

If the corpuls3 is connected via Bluetooth with a corpuls cpr, these parameters can be displayed in parameter fields of the corpuls3:

- mCPR mode
- mCPR compression depth
- mCPR rate and
- Battery charging status of the corpuls cpr

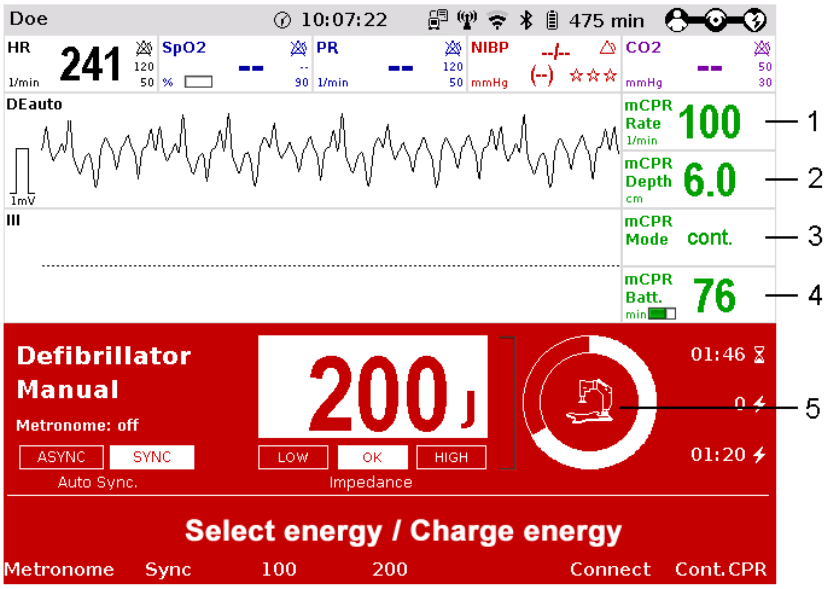

Fig. 5-25 Display of corpuls cpr parameters

1 mCPR rate
2 mCPR compression depth
3 mCPR mode
4 Battery charging status of the corpuls cpr
5 Symbol for connected corpuls cpr

5.9 Compression Synchronised Therapy with the corpuls cpr

Compression synchronised therapy with the corpuls cpr contributes to the optimisation of the resuscitation work-flow. It is also possible to operate the corpuls cpr via the corpuls3 to achieve even shorter hands-off-times and therefore an optimal coordination of both devices. The user can operate or configure the corpuls cpr directly at any time.

Warning

Delayed therapy due to incompatibility!

Compression-synchronised therapy can only be implemented in combination with a corpuls cpr, as a connection to other chest compression devices is not possible.

Warning

Delayed therapy due to malcommunication between the devices!

If there is no or faulty communication between the corpuls3 and the corpuls cpr (operation via the corpuls3), the alarm "Check corpuls cpr" appears (see also chapter 11.1 Device alarms, page 243).

If the error cannot be remedied promptly, both devices have to be operated manually.



Caution

Ineffective mCPR Therapy!

A defibrillation shock can cause the patient to slip and therefore to a changed pressure point which can result in ineffective mCPR therapy.

The user always has to observe the patient and correct the position of the stamp if necessary.



Caution

Crush injury due to the corpuls cpr stamp!

If configured accordingly, the corpuls cpr performs preShock CPR compressions for 8 s, stops when a shock is released and then starts automatically with compressions again. This can lead to patient or user injury.

The user has to be aware of the current configuration and keep parts of the body away from the stamp while therapy is in progress.

To perform compression-synchronised therapy with a corpuls cpr, the following conditions have to be met:

- corpuls cpr and corpuls3 are switched on and connected via Bluetooth (see chapter 9.5.6 Bluetooth connection with corpuls cpr, page 223).
- The patient is in therapy position, i.e. positioned under the corpuls cpr, the locking lever has been opened and closed (see also corpuls cpr user manual).
- The patient is prepared (see chapter 5.2 Preparing the Patient for Defibrillation, Cardioversion and Pacer Therapy, page 70).
- Therapy electrodes are prepared and placed on the patient.

5.9.1 Therapy Control of the corpuls cpr via the corpuls3

Prerequisite: The patient is in therapy position, i.e. positioned under the corpuls cpr, the locking lever has been opened and closed (see also corpuls cpr user manual). The corpuls3 is in defibrillation mode (AED/Manual) and has a connection to the corpuls cpr.

Starting therapy

1. Press softkey [Start mCPR].

   The corpuls cpr starts therapy.

Pausing/stopping therapy

2. Press softkey [Stop mCPR].

   The corpuls cpr pauses therapy.

5.9.2 Configuration of Therapy Parameters of the corpuls cpr

Prerequisite: The corpuls3 is in defibrillation mode (AED/Manual) and has a connection to the corpuls cpr.

Note

The therapy parameters on the corpuls cpr can only be changed in single steps via the softkeys. The jog dial cannot be used for this.

1. Press softkey [Set.mCPR].

Setting compression depth

2. Press softkey [Depth].
3. Set the required compression depths by pressing the softkeys [+] and [-].

Setting compression rate

4. Press softkey [Rate].
5. Set the required compression rate by pressing the softkeys [+] and [-].

Setting therapy mode

6. Press softkey [Mode].
7. Set the required therapy mode by pressing the softkeys [+] and [-].
8. To retain the previous settings and close the configuration dialogue, press the softkey [Close].

5.9.3 Compression Synchronised Therapy in AED mode

Note If there is a connection between the corpuls3 and the corpuls cpr the preShock CPR phase is always 8 s, independent of how long the preShock CPR phase has been configured by the operator.

AED

1. To start the AED mode, press the **AED** key.
2. If configured, select the required energy level with the jog dial or via the softkeys and confirm by pressing the jog dial (see chapter 7.4.4 Configuration of the Defibrillation Function (Persons Responsible for the Device), page 179).

Analyse

3. To start the ECG analysis, press the **Analyse** key.
   If the corpuls cpr is already running at this point, the therapy is paused for the analysis.

If a shockable rhythm is detected and preShock CPR is configured, the corpuls cpr automatically performs preShock CPR compressions for 8 s and pauses, if the user holds down the **Shock** key to release a shock.

If the shock has been released successfully, the message `Shock performed` is shown and the corpuls cpr resumes therapy.

Note If the **Shock** key is pressed too briefly, the corpuls cpr stops only for a short time and continues thorax compressions after the **Shock** key is released.

5.9.4 Compression Synchronised Therapy in Manual Mode

Manual

1. To start the manual defibrillation mode, press the **Manual** key.
2. Select the required energy level with the jog dial or via the softkeys and confirm by pressing the jog dial.
3. If the corpuls cpr is already running at this point, press the softkey [Stop mCPR].
   The corpuls cpr stops therapy. The message "`Assess heart rhythm`" is displayed.
4. Analyse the heart rhythm.
   c) If a shockable rhythm is detected, press the softkey [Start mCPR].
   d) If a **non**-shockable rhythm is detected, press the softkey [Cont.CPR].
   The corpuls cpr resumes therapy. The message "`Device is performing compressions`" is displayed.

Charge

5. To charge the defibrillator press the **Charge** key.
6. Hold down the **Shock** key or both shock paddle buttons until a shock has been released. The corpuls cpr stops in a neutral position until the shock has been released.
   If the shock has been released successfully, the message `Shock performed` is shown and the corpuls cpr resumes therapy.

Note If the **Shock** key is pressed too briefly, the corpuls cpr stops only for a short time and continues thorax compressions after the **Shock** key is released.

6 Operation – Monitoring and Diagnosis

6.1 Information on Monitoring and Diagnosis

The corpuls3 offers comprehensive options for monitoring vital parameters and for diagnosis of critical patients.

The device starts automatically in monitoring mode when it is switched on. Press the **Monitor** key to switch from the therapeutic mode to monitoring mode.

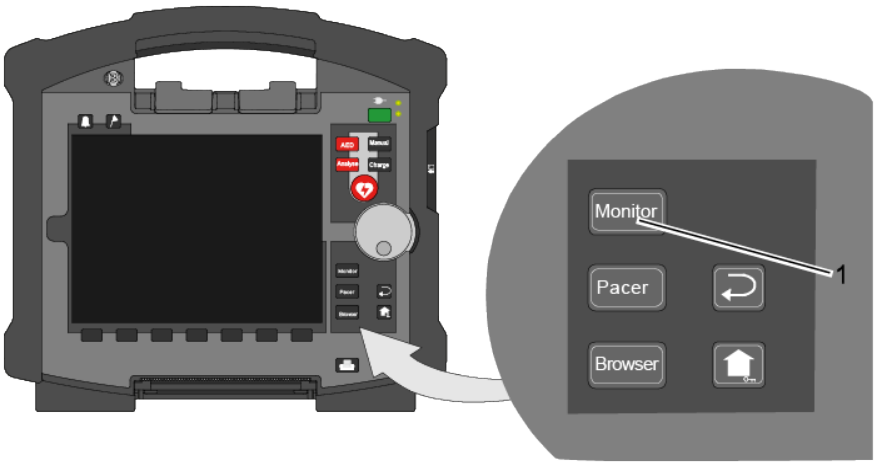

Fig. 6-1 Selection of the monitoring and diagnostic function

1 Monitor key

Automatic System Supervision Function

The device is equipped with an automatic system supervision function that continuously detects and compensates for system deviations between internal modules.

If relevant inconsistencies are detected, that can't be resolved otherwise, the affected modules will restart automatically. This restores the intended overall system functionality and module synchronization.

During this automatic restart, some functions may be temporarily unavailable. This automatic restart is a part of the system architecture.

No action is required.

1. Wait until the restart is complete.

6.2 Monitoring Trends

Softkey [Trend]

The softkey [Trend] opens a softkey context menu. The user can choose between the trend view which displays the trend curves of the vital parameters from the switching on of the device ("Graphic") or the trend browser in table form ("Table").

Up to 6 curves can be displayed in the trend view (by default the parameters HR, SpO_2, PR and NIBP are displayed). Further parameters to be displayed or the timespan (Auto, 30 - 480 min.) over which the trends are displayed can be adjusted via the curve context menu. The trend browser in table form can also be opened from the mission browser (see chapter 8.5.2 Mission Browser, page 200).

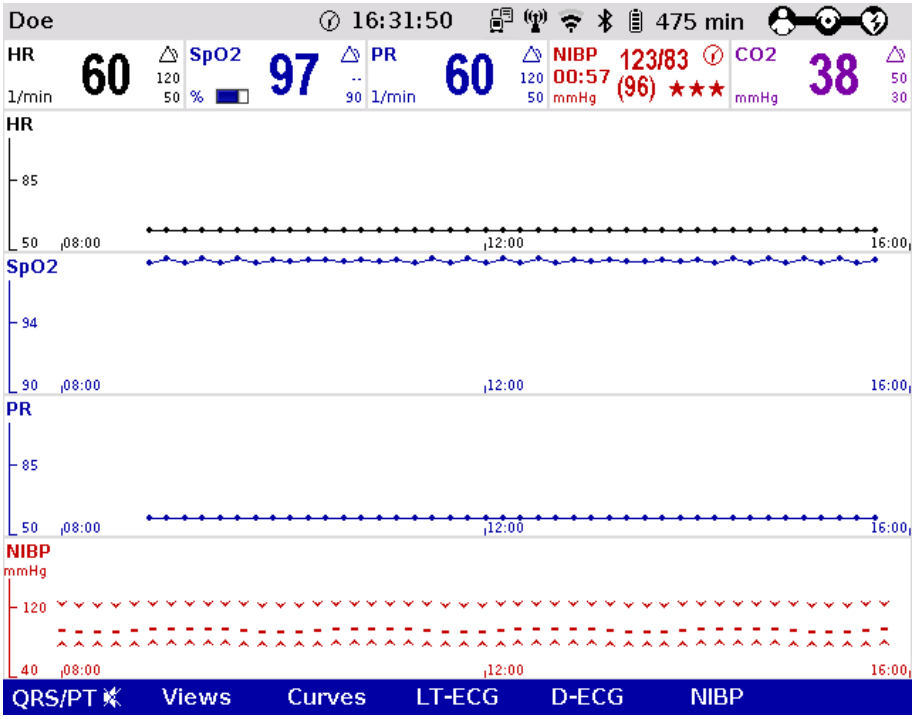

Fig. 6-2 Trend curves

Other parameters can be selected via the curve context menu. To return to the realtime curves, press the softkey [Curves] or press the key **Monitor**, **Back** or **Home**.

The trend curves and the trend table are printed out in the protocol by default. To print out the trend curves and/or the trend table separately, select in the main menu "Printer" ► "Trend page".

Transfer of trend data base

The corpuls3 allows to transfer the complete trend data base to corpuls.mission **LIVE**. So, the consulting doctor using corpuls.mission **LIVE** can review the whole development and gain an overview of the patient`s status.

Size of parameter fields in trend mode

Even if the view "big 4", "big 6" or "big 8" is selected in monitoring mode, in trend mode the big parameter fields are displayed in their normal size.

6.3 Monitoring ECG

6.3.1 Information on ECG Monitoring

The ECG monitoring function of corpuls3 allows routine monitoring of heart rhythm and heart rate. Configurable alarms alert the user to current changes in the ECG. To record the ECG as part of monitoring a 4-pole monitoring cable or corPatch electrodes are necessary.

With the 4-pole ECG monitoring cable, the bipolar extremity leads according to Einthoven (I, II, III) and the unipolar extremity leads according to Goldberger (aVR, aVL, aVF) can be recorded and displayed on the monitor. Simultaneous display of up to 6 ECG leads maximum is possible.

Note Pulses of internal pacers are rejected by the device according to the information in Table A-17, page 305. In case of deviating waveforms, artefacts may occur in the ECG signal.

Note If the external pacer of the corpuls3 is pacing, the pulse rejection is broadened and the recognition of internal pacer pulses is limited.

Note For a reliable suppression of pacer impulses, the 4-pole ECG monitoring cable has to be used.

Note In lead DE no pacer recognition can be performed, because the ECG curve DE cannot display pacer spikes.

Warning

Risk of electrical shock

To guarantee a defibrillation protection for patients, users and third parties, use exclusively the accessories indicated in the list of authorised accessories (see chapter 10.8, Approved Accessories, Spare Parts and Consumables, page 242).

Warning

No patient monitoring

Additional use of a nerve stimulator may modify or completely suppress the ECG representation. In some cases, the ECG of an implanted pacer is displayed instead.

Warning

Risk of delayed therapy/Implanted pacer!

In patients with an implanted pacer, it is possible that shockable ECG rhythms or arrhythmias will only be detected to a limited extent.

Keep pacer patients under close surveillance. Check the pulse of the patient to make sure that the device does not measure the frequency of the implanted pacer.

To check the ECG cables for functional readiness, the use of the optionally available ECG cable tester is recommended (see chapter 10.8 Approved Accessories, Spare Parts and Consumables, page 242).

Note

The depolarisation wave is a spatial unit, i.e. that the beginning of one wave is not visible in all derivations at the same time. Isoelectric sections at the beginning of an QRS complex are treated as part of the following significant wave. Analogously, isoelectric segments at the end of the QRS complex are incorporated into the previous significant wave.

6.3.2 Colour coding of ECG leads

According to IEC 60601-2-25, two codes apply for colour coding ECG lead cables. As a rule, code 1 is generally used in the European region and code 2 in the American region.

	CODE 1 (conventionally used in the European region)		**CODE 2** (conventionally used in the American region)	
Lead	Electrode labelling	Colour coding	Electrode labelling	Colour coding
Extremities (according to Einthoven and Goldberger)	R	Red	RA	White
	L	Yellow	LA	Black
	F	Green	LL	Red
Chest wall (according to Wilson)	C	White	V	Brown
	C1	White/Red	V1	Brown/Red
	C2	White/Yellow	V2	Brown/Yellow
	C3	White/Green	V3	Brown/Green
	C4	White/Brown	V4	Brown/Blue
	C5	White/Black	V5	Brown/Orange
	C6	White/Violet	V6	Brown/Violet
Neutral	N	Black	RL	Green

Table 6-1 ECG lead colour coding

Note

For all representations of the ECG leads in this user manual see CODE 1 (conventionally used in Europe).

6.3.3 Preparing ECG Monitoring

The ECG is recorded with the following cables:

- 4-pole ECG monitoring cable,
  (for leads I, II, III, aVR, aVL and aVF) and
- complementary 6-pole diagnostic cable,
  (for leads V1 to V6) as a supplement to ECG monitoring (for positioning of ECG electrodes C1 to C6, see chapter 6.4.2 Preparing the Patient for a D-ECG, page 116)

Note

The quality of the ECG recordings also depends on the ECG electrodes used:

- Only use ECG electrodes indicated in the list of approved accessories (see chapter 10.8 Approved Accessories, Spare Parts and Consumables, page 242).
- Do not use ECG electrodes whose expiry date indicated on the packaging has passed.
- Only use ECG electrodes of the same type that originate from an identical production process (batch).

Warning

Risk of inadequate therapy

The ECG function is compromised if adhesion of the electrodes is impaired due to contaminated skin or excessive hair.

Preparing the device

Prerequisite: Device is switched on.

1. Remove excessive hair on the thorax so that the conductive surface of the corPatch electrodes has full contact with the skin.
2. Clean the skin on the thorax before applying the ECG electrodes if necessary.
3. Attach the ECG electrodes to the ECG monitoring cable.
4. Place all four ECG electrodes of the 4-pole ECG monitoring cable on the patient:

Positioning the ECG monitoring cable

- Red ECG electrode: right arm; shortened: under the right clavicle (Fig. 6-3, item 1)
- Yellow ECG electrode: left arm; shortened: under the left clavicle (Fig. 6-3, item 2)
- Green ECG electrode: left leg; shortened: in the area of the left inguinal fold, central to the axis of the leg (Fig. 6-3, item 3)
- Black ECG electrode: right leg; shortened: in the area of the right inguinal fold, central to the axis of the leg (Fig. 6-3, item 4)

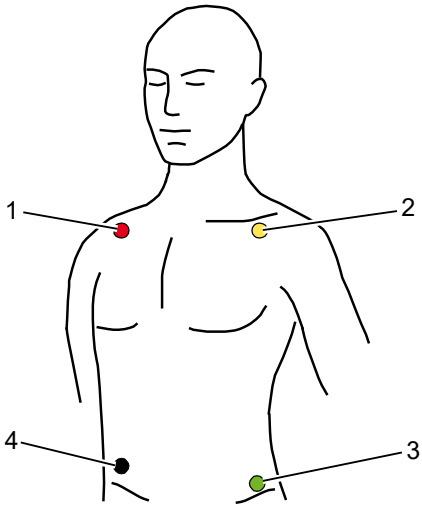

Fig. 6-3 ECG monitoring, applying the ECG electrodes (shortened form)

1 Position of the red ECG electrode
2 Position of the yellow ECG electrode
3 Position of the green ECG electrode
4 Position of the black ECG electrode

Note Connecting and disconnecting ECG electrodes may lead to the detection of false-positive pacer pulses. If this occurs, the device briefly displays pacer pulses, although the patient does not have an implanted (internal) pacer.

Note For a D-ECG, alternative positions are possible, but the morphology of the ECG can be changed.

To check the ECG cables for functional readiness, the use of the optionally available ECG cable tester is recommended (see chapter 10.8 Approved Accessories, Spare Parts and Consumables, page 242).

6.3.4 Performing ECG Monitoring

The ECG is displayed in the following manner:

- Up to 6 leads can be displayed on the screen at the same time.
- The flashing heart symbol ♥ indicates a QRS complex.
- The 20 Hz indicator shows that the 20 Hz filter is active.
- Identification of a QRS complex indicated by a QRS marker ▲ can be configured (see chapter 7.2.1 ECG Monitoring, page 165).
- The lozenge symbol ♦ indicates pacing pulses of an implanted pacer.
- The heart rate can be displayed in a parameter field. The alarm limits can be configured.

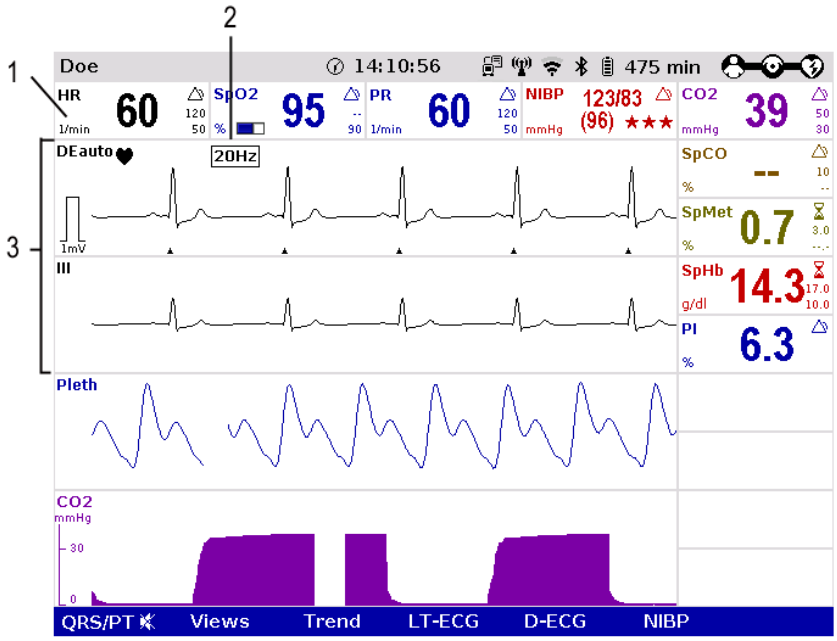

Fig. 6-4 ECG monitoring, initial screen

1 Heart rate parameter field
2 20 Hz indicator
3 ECG curves

1. Adapt the representation of the ECG curve, if necessary (see chapter 6.3.5 Adapting the Representation of the ECG Curve, page 112).
2. Configure the device alarms, if necessary (see chapter 7.3 Alarm Configuration, page 172).

Note If necessary, adapt individual alarm limits manually.

Warning

Risk of wrong diagnosis

The use of the 20 Hz filter in monitoring causes distortions in the ECG that can be misinterpreted. A diagnosis should only be made on the basis of a diagnostic ECG.

Note QRS-/pulse tone and QRS mark are generated independently and may deviate slightly from each other.

Note If individual ECG curves are failing, check the ECG electrodes and the ECG cable.

Printing ECG curves

The ECG curves can be printed out with the integrated printer. For further information on printout configuration see chapter 7.1.3 Printer settings, page 160.

Every real-time printout has the designation "`REALTIME PRINTOUT`" on the first page.

To start or stop real-time printing press the **Print** key.

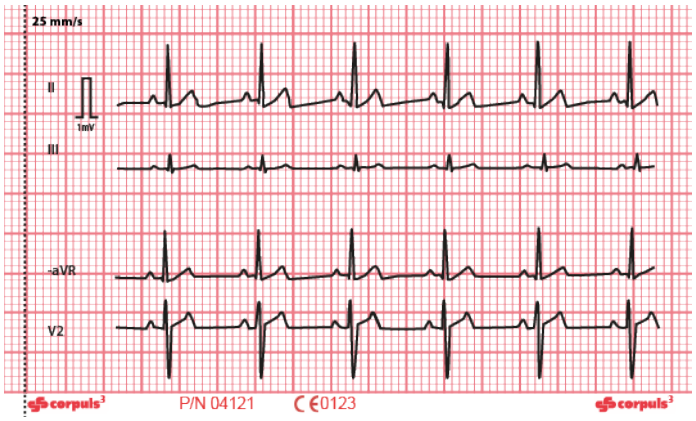

Fig. 6-5 Real-time printout, section

mV-mark

The millivolt mark (in form of a rectangular impulse) is located at the left margin of the curve field (mV-mark). Its height depends on the set amplification of the ECG curve. The mV mark shows an amplitude height of 0.5 or 1 mV for comparison, so that the amplitude of the ECG curve displayed can be determined.

Markings for folding

The real-time printout has vertical markings on the upper and lower edges that help to fold the printout quickly. The folded printout fits the width of a standard sheet of paper (DIN A4) and can be attached there for documentation.

Caution

Loss of important information

At temperatures below zero °C the alarm "ECG electrode [X] `loose`" can be impaired.

6.3.5 Adapting the Representation of the ECG Curve

Up to 6 leads can be displayed simultaneously. The number of the curves displayed can be configured (see chapter 7.1.2 Configuration, page 156).

Selecting Leads

1. Select the curve to be adapted and open the curve context menu (see chapter 4.3.2 Parameter Context Menu and Curve Context Menu, page 52).

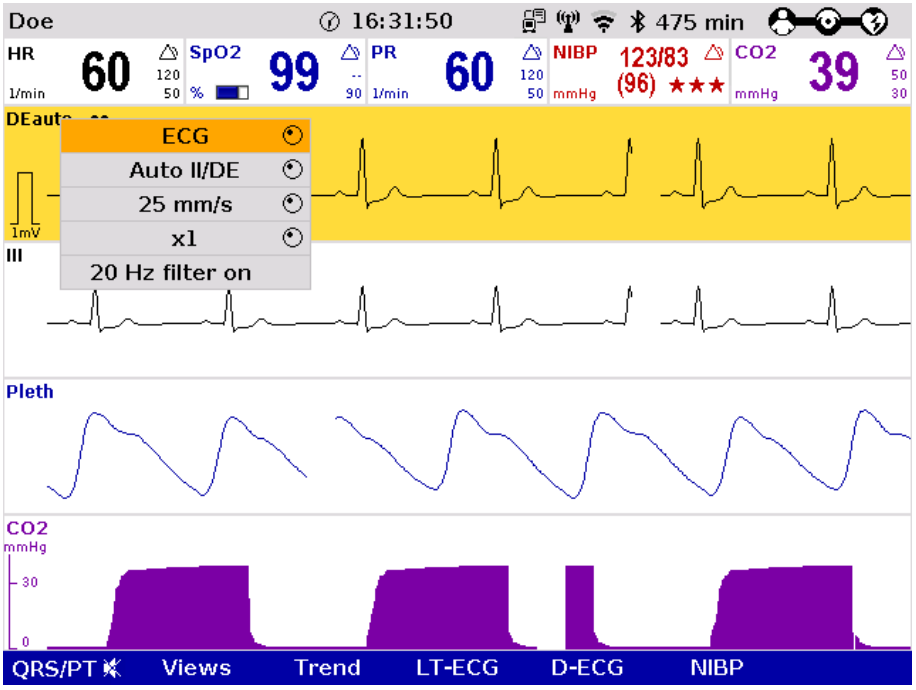

Fig. 6-6 ECG monitoring, adapting the curves

2. Select the required lead in the curve context menu and confirm. The required lead is displayed.
3. Repeat steps 1 and 2 for further curves if necessary.

Amplitude

The amplitude of the displayed ECG curves can either be adjusted automatically by the device or adjusted manually (see chapter 7.2.1 ECG Monitoring, page 165).

With automatic adjustment, the device selects the amplification so that the ECG curve with the greatest amplitude overwrites 50% of the area available on the screen. Consequently, individual greater ECG swings can be displayed as well.

With manual adjustment, the amplification affecting the amplitude display can be selected (x 0.25 / x 0.5 / x 1 / x 2).

In the D-ECG preview, the amplification factor can be selected with the softkeys [Ampl+] and [Ampl-].

mV-mark

The millivolt mark (in form of a rectangular impulse) is located at the left margin of the curve field (mV-mark). Its height depends on the set amplification of the ECG curve. The mV mark shows an amplitude height of 0.5 or 1 mV for comparison, so that the amplitude of the ECG curve displayed can be determined. The millivolt mark is also shown on the paper printout on the left besides the ECG curve.

Note

The selected amplification applies to all ECG curves displayed.

1. Select the ECG curve and open the curve context menu.
2. Select the required amplification in the curve context menu and confirm.
   The ECG curve will be displayed with the required amplification. Once the selection has been made, the program leaves the curve context menu automatically.

Sweep speed

The sweep speed of the screen representation can be selected for the configured ECG curves.

The following sweep speeds can be configured:

- 12.5 mm/s
- 25 mm/s
- 50 mm/s

Note The selected sweep speed applies to all ECG curves displayed.

1. Select the ECG curve and open the curve context menu.
2. Select the required sweep speed in the curve context menu and confirm. The ECG curve is displayed with the required sweep speed. Once the selection has been made, the program leaves the curve context menu automatically.

ECG filters The device adjusts the ECG filters automatically. The filters can be modified manually if necessary for displaying the ECG curve.

The default setting of the ECG filter in monitoring mode is 0.5 - 25 Hz. Additionally, muscle contractions of the patient can be filtered out of the ECG by means of the 20 Hz filter. The 20 Hz filter can be activated or deactivated via the curve context menu.

Warning

Risk of wrong diagnosis

The use of the 20 Hz filter in monitoring causes distortions in the ECG that can be misinterpreted. A diagnosis should only be made on the basis of a diagnostic ECG.

The quality of the ECG depends among other factors on the ECG filter settings. See chapter 7.4.5 Filter Settings (Persons Responsible for the Device), page 181 for information on the filter settings.

See chapter 11 Procedure in Case of Malfunctions, page 243 for instructions on improving the ECG quality.

6.3.6 Heart rate monitoring

In addition to the ECG curves, the heart rate is evaluated and displayed on the screen when monitoring the ECG.

1. To display the heart rate, select the parameter field and open the parameter context menu (see chapter 4.3.2 Parameter Context Menu and Curve Context Menu, page 52).
2. Select heart rate in the parameter context menu and confirm. The heart rate is displayed in the parameter field.
3. By means of the parameter context menu for the heart rate, the VT/VF alarm can be enabled "VT/VF alarm ON" or disabled "VT/VF alarm OFF".

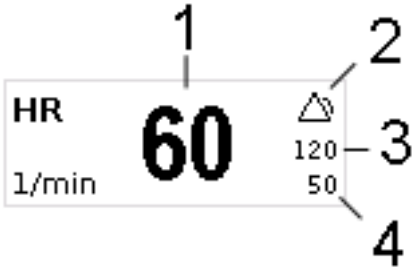

Fig. 6-7 Heart rate parameter field

1 Current heart rate in 1/min
2 Symbol for switched-on alarms
3 Upper alarm limit
4 Lower alarm limit

Note Beyond the specified limits of 18/min or 300/min the heart rate cannot be calculated correctly.

6.4 Recording, Measuring, Printing and Interpreting a Diagnostic ECG

6.4.1 Information on Diagnostic ECG

Hannover EKG System HES® Pro

In cooperation with internationally renowned cardiologists, **HES**® has been developed and refined continuously since 1968. A large number of leading medical equipment manufacturers integrate this algorithm into their medical products.

Based on a 12 lead ECG, **HES® Pro** performs a ECG measurement of the diagnostic ECG. On the printout, the results are clearly arranged in tables that can help with interpretation and diagnosis during a mission.

The corpuls3 then issues a therapy suggestion based on the results of the "corpuls S" or "corpuls ACS" therapy algorithms. With these, the user can make early tactical decisions regarding the target clinic for the patient and which emergency measures are to be performed immediately.

Note

HES® Pro is available in devices that have been placed on the market in accordance with the EU Medical Devices Directive (MDD).

Glasgow ECG Program

Development of the Glasgow ECG Program began in 1964 in the University of Glasgow (www.gla.ac.uk) in the Cardiology Department of the Royal Infirmary. In 1971 a small laboratory based computer system based on the 3-orthogonal lead ECG was first used to provide a routine ECG reporting service in Glasgow Royal Infirmary.

This basic approach to signal processing, ECG interpretation and serial comparison was all developed on that small computer system, which may have been the world's first small hospital based lab computer to provide routine automated ECG interpretation.

Throughout the 1980s and thereafter, in collaboration particularly with Siemens Elema based in Stockholm, methods for 12-lead ECG analysis were developed and marketed world-wide by Siemens.

Caution

HES® and the two measurement and interpretation algorithms corpuls **ACS** or corpuls **S** may yield different results in some cases. This is due to differences in focus of these algorithms, their sensitivity and specificity, as well as operator configuration.

Note

Glasgow does not use the interpretation algorithms corpuls **ACS** and corpuls **S** as basis. These are only available for **HES® Pro**.

Representative Cycle

HES® Pro and **Glasgow Basic** and **Glasgow Full Scale** identify a "Representative cycle" from the diagnostic ECG. From this representative cycle the measurement tables are compiled which are necessary for an ECG interpretation (see chapter 6.4.4 Representative Cycle, page 125). The representative cycle can be printed out with the diagnostic ECG. For further information on printout configuration see chapter 7.1.3 Printer settings, page 160.

Abbreviations for ECG Measurement/ EKG Interpretation

For an overview of the used abbreviations, see Appendix B List of Abbreviations, page 289.

With the complementary 6-pole ECG diagnostic cable, Wilson's 6 unipolar thoracic wall leads (V1-V6) can be recorded. In combination with the ECG monitoring cable, 12 leads can be displayed simultaneously.

The screen shows a complete preview of all 12 leads which can be printed on paper with the internal printer of the corpuls3. The format and duration of the printout can be configured in size and length. For further information on printout configuration see chapter 7.1.3 Printer settings, page 160.

Note

To check the ECG cables for functional readiness, the use of the optionally available ECG cable tester is recommended (see chapter 10.8 Approved Accessories, Spare Parts and Consumables, page 242).

Risk of inadequate therapy

The user/physician is always responsible for correct diagnosis and therapy.

Warning



Warning

No patient monitoring

Additional use of a nerve stimulator may modify or completely suppress the ECG representation. In some cases, the ECG of an implanted pacer is displayed instead.



Caution

Risk of inadequate therapy

The preview of the D-ECG on the screen serves only to check the individual ECG leads, the signal quality and possible arrhythmias. A diagnosis of the D-ECG must be based on the printout of the D-ECG.

6.4.2 Preparing the Patient for a D-ECG

The diagnostic ECG is recorded with the following cables:

- 4-pole ECG monitoring cable,
  (for leads I, II, III, aVR, aVL and aVF) and
- 6-pole complementary ECG diagnostic cable,
  (for leads V1 to V6)

Preparing the Patient

1. Remove excessive hair, so that the conductive areas of the therapy electrodes can have full contact with the skin.
2. Clean and dry the skin before applying the ECG electrodes.

Positioning the ECG monitoring cable

3. Place all four ECG electrodes of the 4-pole ECG monitoring cable on the patient:

- Red ECG electrode: right arm (Fig. 6-8, item 1)
- Yellow ECG electrode: left arm (Fig. 6-8, item 2)
- Green ECG electrode: left leg (Fig. 6-8, item 3)
- Black ECG electrode: right leg (Fig. 6-8, item 4)

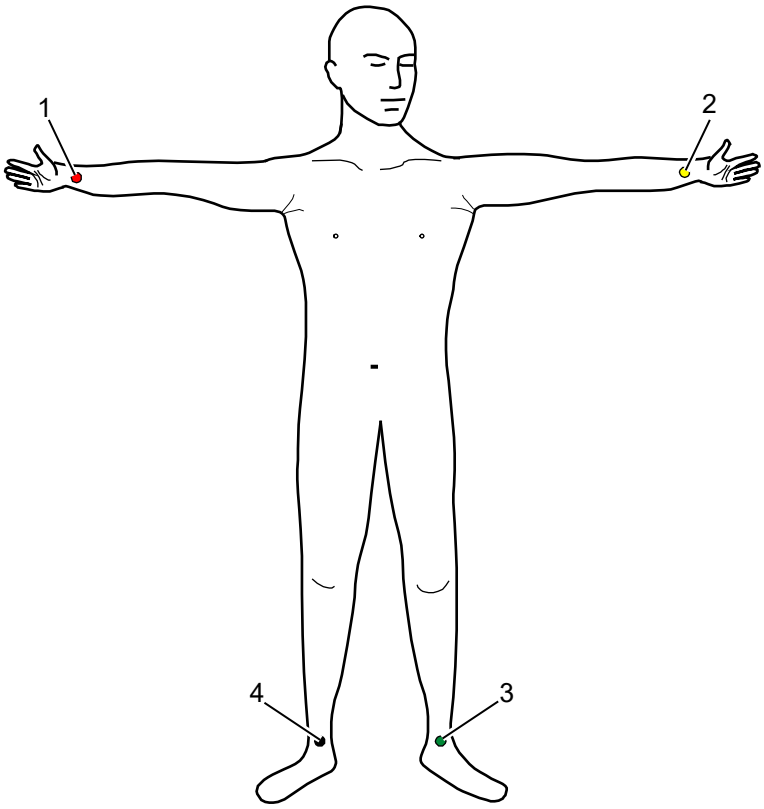

Fig. 6-8 Diagnostic ECG, applying the ECG electrodes (1)

1 Position of the red ECG electrode
2 Position of the yellow ECG electrode
3 Position of the green ECG electrode
4 Position of the black ECG electrode

Positioning the complementary 6-pole ECG diagnostic cable

4. Place all 6 ECG electrodes of the complementary ECG diagnostic cable on the patient's thorax:
   - Red V1-ECG electrode: 4th intercostal space, right parasternally
   - Yellow V2-ECG electrode: 4th intercostal space, left parasternally
   - Brown V4-ECG electrode: 5th intercostal space, left medioclavicular line
   - Green V3-ECG electrode: between V2 and V4 on the 5th rib
   - Black V5-ECG electrode: front left axillary line at the level of V4
   - Violet V6-ECG electrode: middle left axillary line at the level of V4

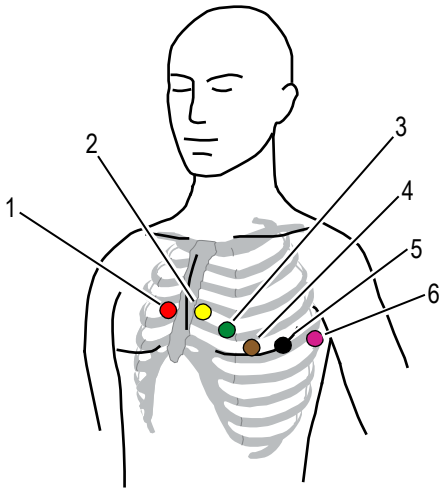

Fig. 6-9 Diagnostic ECG, applying the ECG electrodes (2)

1 Position of the red V1-ECG electrode
2 Position of the yellow V2-ECG electrode
3 Position of the green V3-ECG electrode
4 Position of the brown V4-ECG electrode
5 Position of the black V5-ECG electrode
6 Position of the violet V6-ECG electrode

Note Connecting and disconnecting ECG electrodes may lead to the detection of false-positive pacer pulses. If this occurs, the device briefly displays pacer pulses, although the patient does not have an implanted (internal) pacer.

Note The ECG monitoring interfaces ECG-M and ECG-D are specified as CF (cardiac floating). The patient connections are fully insulated and defibrillation-proof.

Note The quality of the ECG recordings also depends on the ECG electrodes used:

- Only use ECG electrodes indicated in the list of approved accessories (see chapter 10.8 Approved Accessories, Spare Parts and Consumables, page 242).
- Do not use ECG electrodes whose expiry date indicated on the packaging has passed.
- Only use ECG electrodes of the same type that originate from an identical production process (batch).

Note To check the ECG cables for functional readiness, the use of the optionally available ECG cable tester is recommended (see chapter 10.8 Approved Accessories, Spare Parts and Consumables, page 242).

Warning

Risk of inadequate therapy

The ECG function is compromised if adhesion of the electrodes is impaired due to contaminated skin or excessive hair.

6.4.3 Recording and Measuring a Diagnostic ECG

1. If possible, ask the patients to hold their breaths (for approx. 10 s) while ECG is obtained.
2. Press the softkey [D-ECG]. A preview of all 12 ECG leads is displayed on the screen.

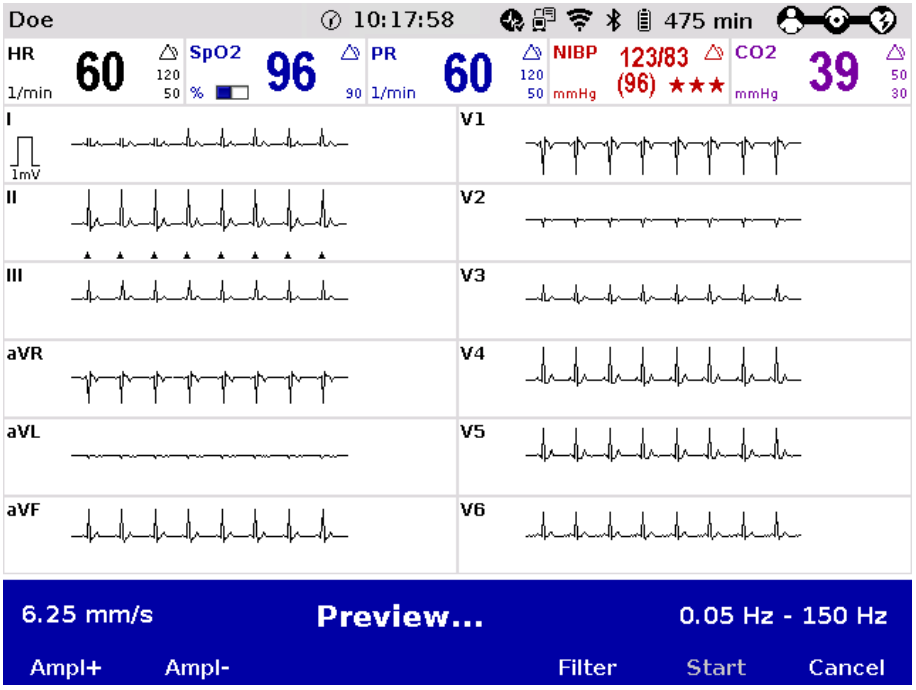

Fig. 6-10 Diagnostic ECG, preview screen

3. Check in the preview if all ECG leads are written.
4. Check in the preview if the signal quality of the leads is acceptable.
5. If the signal quality of one or several leads is poor, check electrode contact and electrode positioning and take appropriate measures (see chapter 11 Procedure in Case of Malfunctions, page 243).

The user OPERATOR can set the sweep speed of the ECG in the D-ECG preview (see chapter 7.2.1 ECG Monitoring, page 165). With the option "10s preview", the sweep speed is 6.25 mm/s, so that the complete 10 s segment of the ECG can be viewed at one glance. If this option is deselected, the same sweep speed as in monitoring view is used.

Note If individual ECG curves are failing, check the ECG electrodes and the ECG cable.

6. When the message "**`Ready for D-ECG`**" appears in the preview, press the softkey [Start]. The ECG recorded up to this moment is discontinued and saved.
7. The configuration dialogue for entering the patient's sex and age opens. The configuration dialogue has to be confirmed with the softkey [OK].
8. If required, further settings for the D-ECG can be configured with the softkey [Config.].
9. With the softkey [Print] the D-ECG is printed out for diagnosis (see Fig. 6-12 Printout of 12, page 121) and with the softkey [Send] it is sent e.g. to corpuls.mission **LIVE**.
10. If the option ECGmax is licensed, corpuls.mission **LIVE** calculates further leads and the CEB® (Cardiac Electrical Biomarker) and sends this information as webMessage back to the corpuls3. The messages "**`New ECGmax No. [NUMBER] received`**" or "**`New CEB No. [NUMBER] received`**" appear and the softkey [ECGmax] is active.
11. With the softkey [Print] the extended ECG can be printed out immediately. To close the message, press softkey [Cancel].

Note The extended ECG can also be printed out afterwards via the mission browser.

12. To run another preview on the monitor, press the softkey [Cont.].
13. To quit the preview and to switch to monitoring mode, press the softkey [Cancel].



Fig. 6-11 D-ECG, options

Note The orthogonal leads and the vector loops cannot be printed via the corpuls3. A printout is only possible by generating a PDF in corpuls.mission **LIVE**.



Caution

HES® and the two measurement and interpretation algorithms corpuls **ACS** or corpuls **S** may yield different results in some cases. This is due to differences in focus of these algorithms, their sensitivity and specificity, as well as operator configuration.

Filter setting After calling up the preview, the diagnostic ECG is automatically started with the diagnostic filter setting, e. g. 0.05 -150 Hz. The filter bandwidth is displayed in the right corner at the bottom of the preview screen. It is possible, however, to switch to an alternative diagnostic filter setting, e.g. 0.05 – 40 Hz. For this purpose press the softkey [Filter]. **HES® Pro**, **Glasgow Basic** and **Glasgow Full Scale** are not affected by these filter settings.



Warning

Risk of inadequate therapy

If the factory setting of the filters is changed, the representation of the ECG can be affected. As a consequence, wrong interpretation of the ECG is possible, which may result in inadequate treatment.

Note To increase diagnostic safety, the message "**ECG FILTER ACTIVE - INTERPRETABILITY MAY BE AFFECTED**" is printed for the user on the printout if the ECG is changed by filter settings and thus the interpretability is limited.

Amplification settings After calling up the preview, the diagnostic ECG is automatically started with the amplification factor x1. By pressing the softkey [Ampl+] or [Ampl-], the amplification factor can be adjusted (x2, x1, x0.5, x0.25). If the amplification factor is changed, the preview starts again.

Note If no patient data is to be entered at the moment, the prompt for the patient data can be skipped with the softkey [OK]. For the ECG interpretation by HES, the device automatically assumes a male patient, aged 35, for the ECG interpretation by Glasgow a male patient, aged 50.

Note If the patient data have already been entered by means of the insurance card reader (option), only the patient's sex has to be entered manually to perform ECG measurement and ECG interpretation.



Caution

Risk of inadequate therapy

Patient and insuree have to be one person, otherwise the results of the ECG analysis can be misinterpreted.

Note ECG measurement and ECG interpretation requires approx. 2-3 seconds.

Note The person responsible for the device (user OPERATOR) can configure, whether an alarm/message should inform the user of findings like "Abnormal ECG", "STEMI" or "NSTEMI" already during the ECG analysis.

Note If the corpuls3 is connected with a fax server or with corpuls.mission **LIVE**, the D-ECG is simultaneously printed and sent when the softkey [Print] is pressed (see chapter 9.2 Configuration of Telemetry Services (Persons Responsible for the Device), page 209).

Note Via the mission browser (see chapter 8.5.2 Mission Browser, page 200), a diagnostic ECG from an old mission can be sent or printed later on.

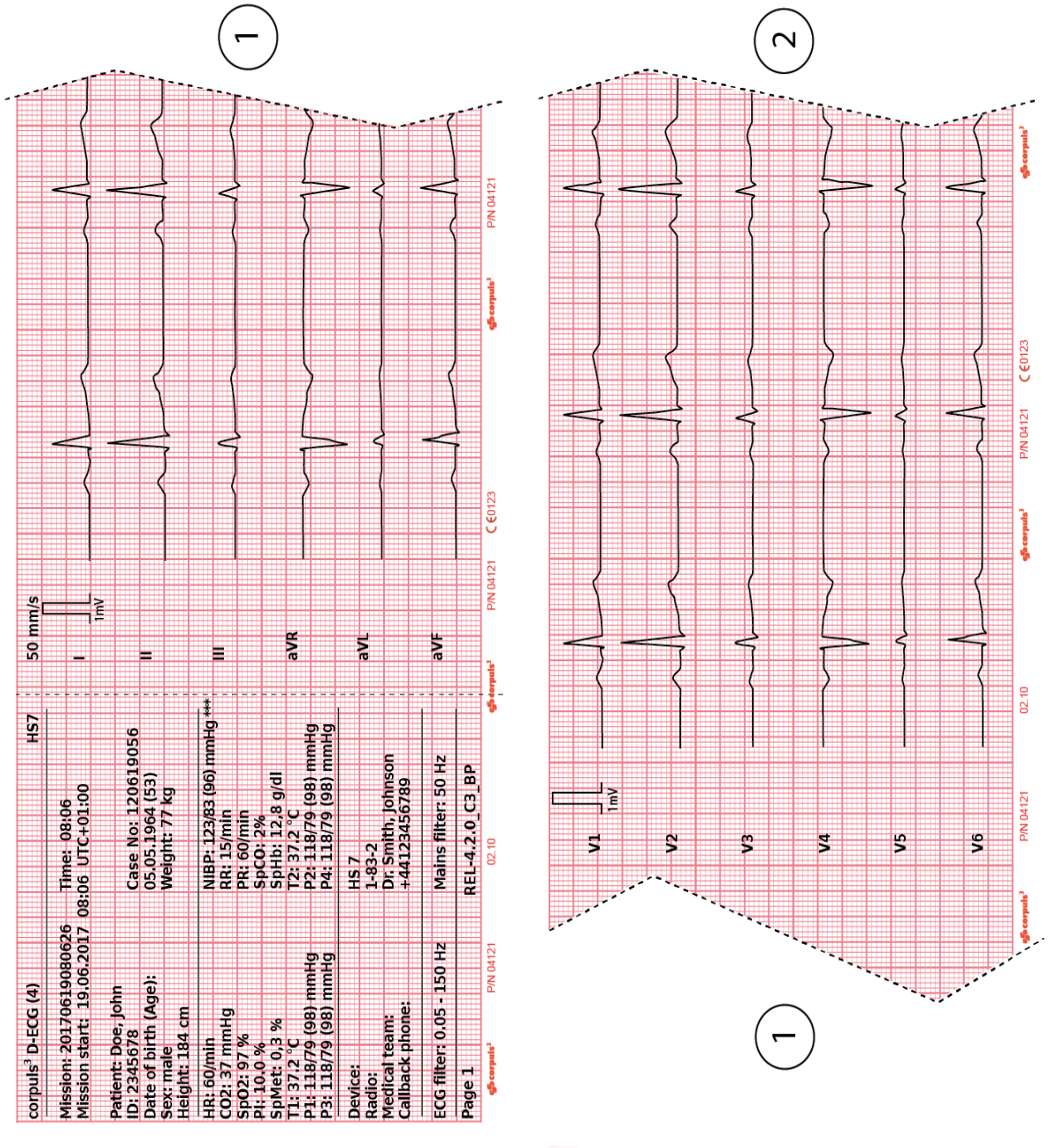

Fig. 6-12 Printout of 12-lead ECG (illustration may differ)

Note The D-ECG printout contains the trend values of the last minute at the time the softkey [Print] is pressed. For this reason the D-ECG recorded may originate from an earlier time. The heart rate calculated by an ECG interpretation algorithm (**HES® Pro** or **Glasgow Full Scale**) may therefore differ.

Printer settings for D-ECG The format and the duration of the D-ECG printout can be configured with the softkey [Config.]. For further information on printout configuration see chapter 7.1.3 Printer settings, page 160.

Note Every printed D-ECG is documented as an event in the log.

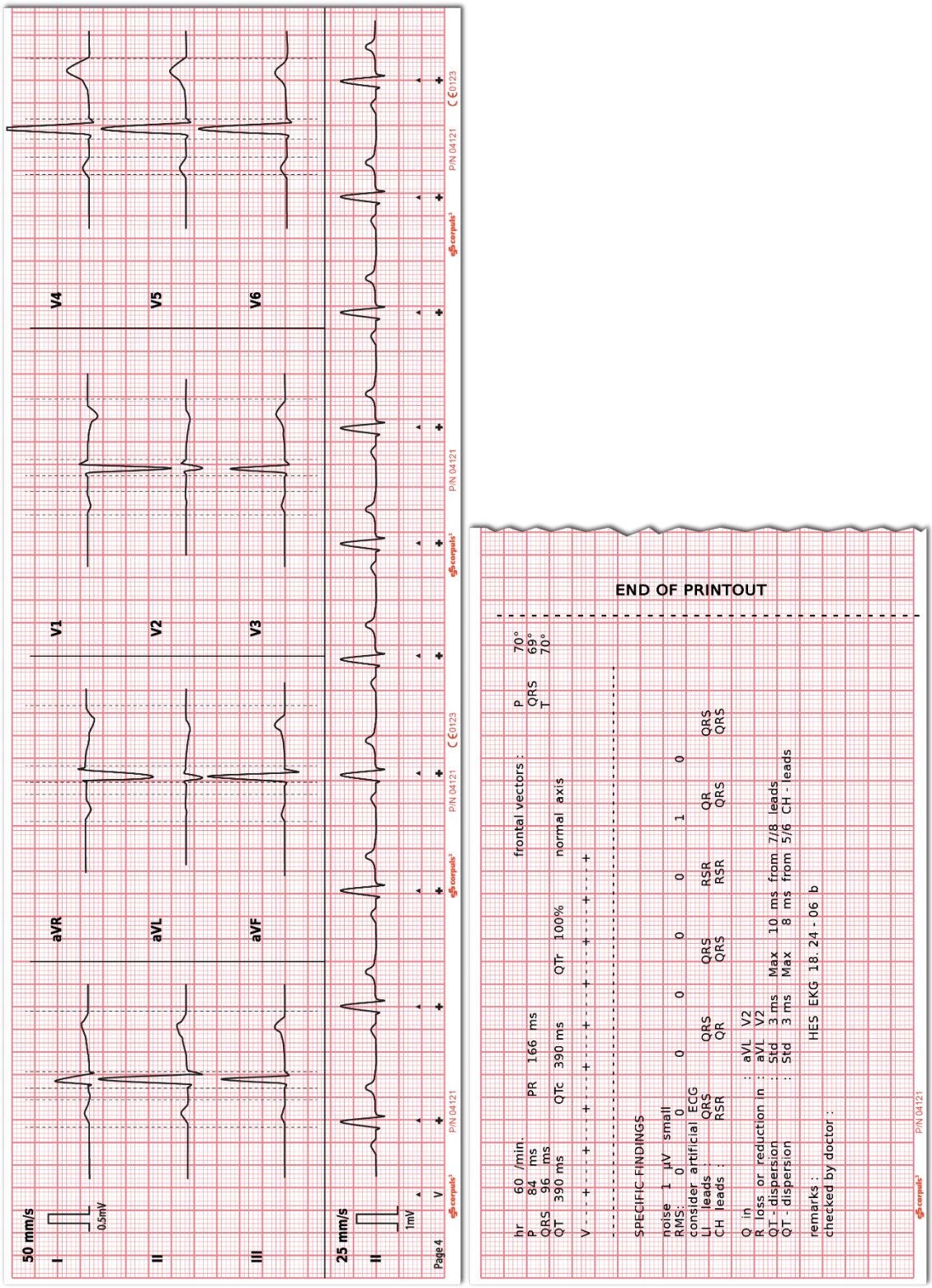

Fig. 6-13 D-ECG printout of the representative cycle with **Glasgow Full Scale** (optional) (illustration may differ)

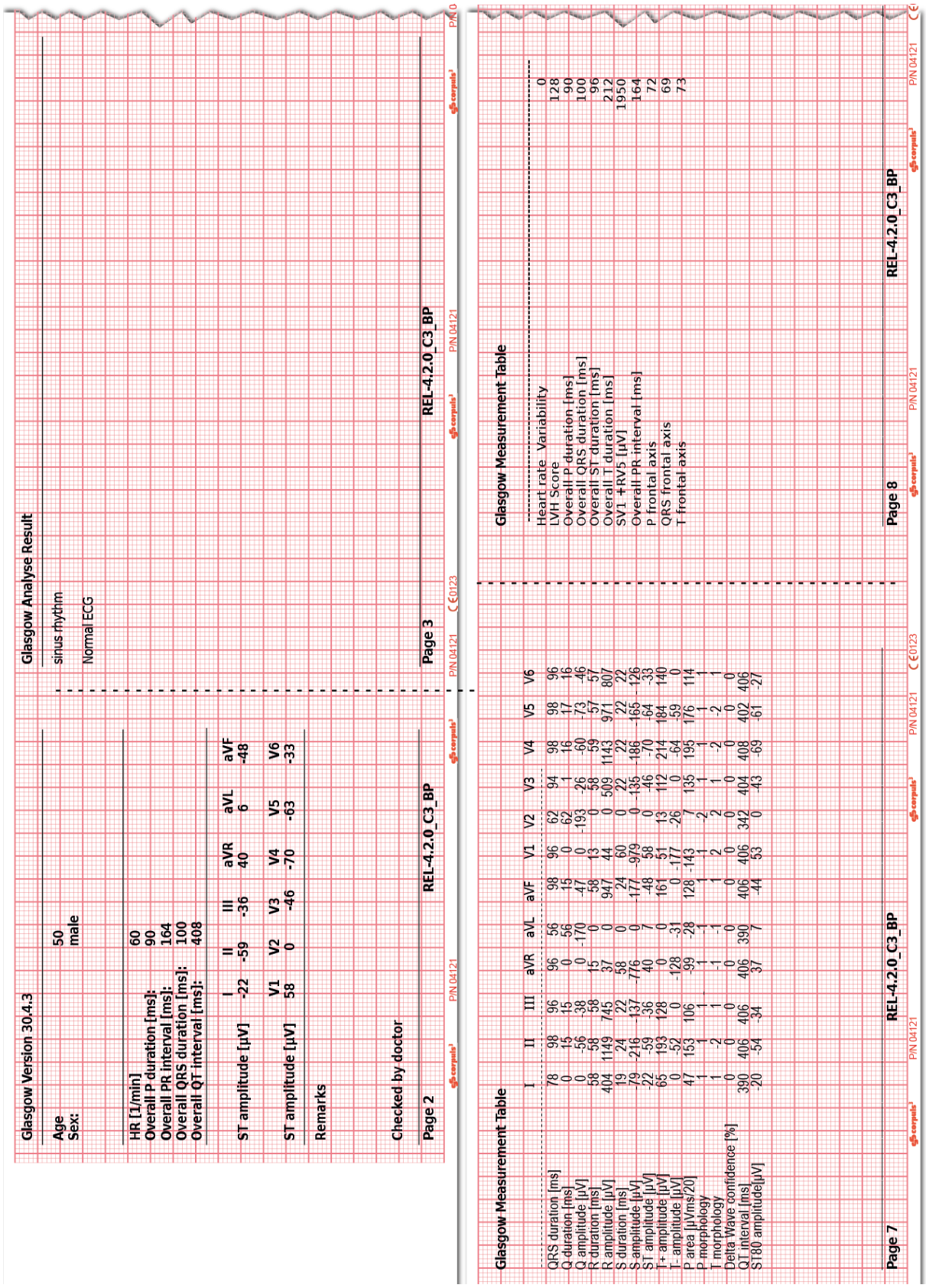

Fig. 6-14 D-ECG printout with ECG analysis and ECG interpretation **Glasgow Full Scale** (option) (illustration may differ)

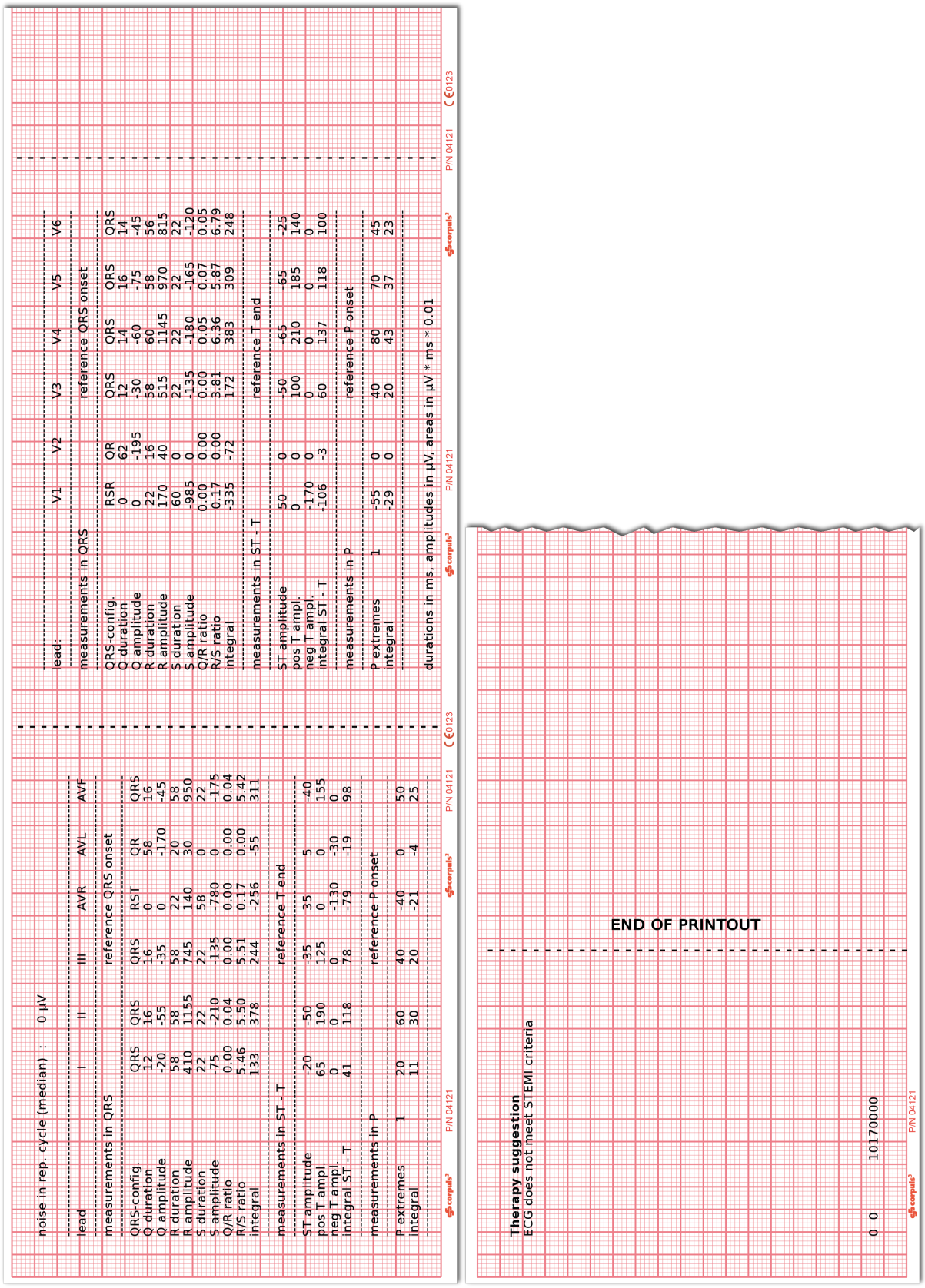

noise in rep. cycle (median) : 0 µV

lead: V1 V2 V3 V4 V5 V6

measurements in QRS

lead	I	II	III	AVR	AVL	AVF
reference QRS onset						
QRS-config.	QRS	QRS	QRS	RST	QR	QRS
Q duration	12	16	16	0	58	16
Q amplitude	-20	-55	-35	0	-170	-45
R duration	58	58	58	22	20	58
R amplitude	410	1155	745	140	30	950
S duration	22	22	22	58	0	22
S amplitude	-75	-210	-135	-780	0	-175
Q/R ratio	0.00	0.04	0.00	0.00	0.00	0.04
R/S ratio	5.46	5.50	5.51	0.17	0.00	5.42
integral	133	378	244	-256	-55	311
reference T end						
ST amplitude	-20	-50	-35	35	5	-40
pos T ampl.	65	190	125	0	0	155
neg T ampl.	0	0	0	-130	-30	0
integral ST - T	41	118	78	-79	-19	98
reference P onset						
P extremes	1	20	60	40	0	50
integral	1	11	30	20	-21	-4	25

QRS-config.	RSR	QR	QRS	QRS	QRS	QRS
Q duration	0	62	12	14	16	14
Q amplitude	0	-195	-30	-60	-75	-45
R duration	22	16	58	60	58	56
R amplitude	170	40	515	1145	970	815
S duration	60	0	22	22	22	22
S amplitude	-985	0	-135	-180	-165	-120
Q/R ratio	0.00	0.00	0.00	0.05	0.07	0.05
R/S ratio	0.17	0.00	3.81	6.36	5.87	6.79
integral	-335	-72	172	383	309	248
reference T end						
ST amplitude	50	0	-50	-65	-65	-25
pos T ampl.	0	0	100	210	185	140
neg T ampl.	-170	0	0	0	0	0
integral ST - T	-106	-3	60	137	118	100
reference P onset						
P extremes	-55	0	40	80	70	45
integral	-29	0	20	43	37	23

durations in ms, amplitudes in µV, areas in µV * ms * 0.01

P/N 04121 CE 0123

Therapy suggestion
ECG does not meet STEMI criteria

END OF PRINTOUT

0 0 10170000

P/N 04121

Fig. 6-15 D-ECG printout with ECG analysis and ECG interpretation **HES® Pro** (option) (illustration may differ)

Coded Explanation

In case no therapy suggestion can be made for certain reasons, **HES® Pro** provides a coded explanation. See the following list for relevant codes:

Type	Code	Explanation
Localisation of complexes	100	More than 30 QRS complexes found.
	110	Too few QRS complexes found.
	120	Too much line frequency noise (50 Hz).
QRS Typing	300	Too few QRS complexes for QRS typing.
Wave recognition	602	The ECG contains only QRS complexes that have been triggered by the pacer. No measurement or diagnostics possible.
	604	The intrinsic QRS complexes are rejected for averaging by the program. No measurement or diagnostics possible.
	615	Too much line frequency noise (50 Hz).
	620	Extreme line frequency noise (50 Hz).

Table 6-2 Coded Explanations by **HES® Pro**

6.4.4 Representative Cycle

To support the physician with the diagnosis, the corpuls3 compiles a representative cycle on the basis of the diagnostic ECG. The representative cycle offers a visualisation of the "typical" ECG complex and represents the basis for ECG measurement and –interpretation for **Glasgow Full Scale** and **HES® Pro.** For this, the recorded ECG complexes are analysed with regard to their morphology.

ECG complexes with a similar dominant morphology are averaged mathematically and then represented visually.

If individual ECG complexes differ from the morphology of others, these are marked (see Table 6-3) and not included into the representative cycle. The intervals between the R-peaks (R-R interval) are denoted by a dash "-".

Designation	Explanation
+	Dominant ECG complex included for averaging.
-	Schematical distance between two ECG complexes.
2, 3, 4	Extrasystole, type 2, 3 or 4.
X, U	Excluded due to technical problems, e. g. malfunction, unidentified aberrant form.
!	Pacer pulse detected (Spike).
P	Excluded due to deviating P-contours.
T	Excluded due to deviating T-contours.
O	Excluded due to deviating P- and T-contours.
B	Excluded due to base line fluctuations.
R	Excluded due to a too small/large distance to earlier or following cycle. Measurement error possible!
V	Excluded due to ECG complex being located too much outside of the examined interval (P- or T-wave partially missing).

Table 6-3 Criteria of the representative cycle

Typing diagram

Conclusions about the rhythm of a recording of just 10 s length require an analysis of every available ECG complex and every previous or following R-R-interval.

For the plausibility check of the conclusions about the rhythm and as an aid for the quality check, the ECG measurement/interpretation program **HES®** issues a rhythm- and typing diagram that represents the cycle sequence of the ECG complexes in an abbreviated form (see page 122, Fig. 6-13, item 1).

Each ECG complex is represented by a symbol. The distance between the symbols represents - on a greater raster - the R-R-interval.

Example 1:

+--+--+--+--+--+--+--+--+--+

Fig. 6-16 Rhythm- and typing diagram for a regular sinus rhythm

This representation means that 9 ECG complexes of the same morphology have been found in the recorded ECG and have been averaged for a "Representative cycle". The distance between the ECG complexes was roughly the same (regular distance -).

Example 2:

+--+-2---+--+-2---+-P---+--+

Fig. 6-17 Rhythm- and typing diagram for a sinus rhythm with two compensated ventricular and one compensated supraventricular extrasystole (illustration may differ)

In this representation 10 ECG complexes have been found. The complexes 1, 2, 4, 5, 7, 9 and 10 represent the main type, from which the "Representative cycle" for diagnosis has been averaged.

The ECG complexes number three and six ("2") deviate from the main type in their QRS morphology and have a shortened distance to the previous complex and a prolonged R-R-interval to the following normal complex (+). This fact indicates two monomorphous ventricular extrasystoles and the text message should contain corresponding advice.

Complex number eight ("P") has a shortened distance to the previous complex (+) and a prolonged distance to the following normal complex (+).

"P" means that only the P-wave, but not the QRS-T of the respective ECG complex deviates from the normal cycle. In conjunction with the prematurity and subsequent prolongation of the R-R-interval, one concludes an atrial extrasystole and expects corresponding advice in the text message.

Note In general, a visual check of the rhythm- and typing diagram as well as a check of the fiducials should be integral part of the quality check of the computerised ECG evaluation.

Note For further information, the **HES®** ECG manual is available in German and English. The manual can be obtained from your authorised sales and servicepartners.

Note For further informationen the Physician's Guide for **Glasgow** (P/N 04145.02, only in English) is available for consultation. The manual can be obtained from your authorised sales and servicepartners.



Warning

Risk of inadequate therapy

Every ECG printout must be checked by a doctor and only becomes medical evidence with the signature of the doctor.

6.4.5 ECGmax (Option in Connection with corpuls.mission LIVE)

Note The calculation of the posterior, right-sided and orthogonal leads as well as of the vector loops and the CEB® are implemented by another approved medical device (VECGWEB by VectraCor) in the background, based on the D-ECG transferred by the corpuls3 to corpuls.mission **LIVE** (see also chapter 9.4.1 Live data transmission to corpuls.mission LIVE, page 215).



Use by professionals only!

Caution

All VectraCor's products are intended for use by a physician or by trained personnel under a physician's supervision.

Read all instructions for use and specifications provided prior to use.

22 Leads

With the option "ECGmax" in the application corpuls.mission **LIVE** you not only get the usual 12, but 22 ECG leads and thus a much more comprehensive picture of the heart muscle including the posterior wall and the right side. The current European Society of Cardiology guidelines recommend that these additional leads be examined as well, if possible.

No additional effort is required and no other electrodes have to be attached or positioned. The additional leads are calculated in corpuls.mission **LIVE** from the sent D-ECG and then can be sent back to the corpuls3 (see chapter 9.7 webMessage, page 223).

Vector loops

The vector loops according to Frank are is spatially represented in a three-dimensional individual coordinate system in corpuls.mission **LIVE**. These figures cannot be sent to the corpuls3 and can only be viewed directly in corpuls.mission **LIVE**.

Cardiac Electrical Biomarker (CEB®)

In addition, ECGmax can calculate the Cardiac Electrical Biomarker (CEB®) from the same leads. By means of the three areas of the CEB® – normal, conspicuous, abnormal – the user can immediately recognise whether myocardial ischaemia is present, as the sensitivity and specificity of the CEB® are comparable to a troponin-test.



Warning

Risk of wrong diagnosis!

The CEB® index has only been tested in comparison to physician interpretation of standard 12-lead ECGs in patients presenting to an acute care setting, and not in comparison to additional clinical data documenting the presence of acute myocardial infarction.

Do not use the CEB® index as the final diagnosis, it still needs the physician's diagnosis.



Warning

Risk of wrong diagnosis!

The CEB® index is accurate if the 10 seconds of derived ECG data do not include the following:

Wandering baseline, noise, Premature Ventricular Contractions (PVCs), paced beats, improper placement of electrodes, missing leads (disconnected leads), patients younger than 18 years old, and bundle branch block.

Only use the CEB® for correctly obtained ECGs of adult patients.

Note

For further information on the ECGmax option in corpuls.mission **LIVE**, read the pertaining user manual (P/N 04134.02).

Note

In case of a bad data connection, the sending of the 12-lead ECG or reception for the ECGmax result can be delayed.

6.5 Longterm ECG

6.5.1 Information on Longterm ECG

With the longterm ECG function of the corpuls3, the user is able to monitor the ECG lead II (or DE) over the whole course of the mission, either during the mission or afterwards. This allows an evaluation of the quantity of cardiac dysrhythmias or the detection and printout of infrequent dysrhythmias.

Views of the longterm ECG

There are two views for the longterm ECG:

- View with monitoring function of the current mission or
- View in the longterm ECG browser.

Cascade

Both views have a curve area showing lead IIauto or DEauto as a cascade over four curve fields. The area above the cascade shows the time specification of the point in time currently selected, the zoom specification in mm/s and the timeline.

The longterm ECG with monitoring function displays a horizontal parameter area and one curve field of the current patient monitoring. The parameter area shows as a default HR, SpO_2, PR, NIBP and CO_2, the curve field lead II. These settings can be configured via the respective context menu.

In the longterm ECG browser that can be opened via the mission browser (see chapter 8.5.2 Mission Browser, page 200), longterm ECGs from already finished missions can be opened and printed out. The area above the longterm ECG shows the mission data, patient data and total length of the selected mission.

The time specification refers to the beginning of the cascade. The yellow bar on the timeline can be moved with the jog dial. The required resolution of the longterm ECG can be selected via the zoom function.

6.5.2 Preparing Longterm ECG

Prerequisite for the longterm ECG is a 4-pole ECG monitoring cable connected to the patient (see chapter 6.3.4 Performing ECG Monitoring, page 111). If no 4-pole ECG monitoring cable is present, the DE-lead (if connected) will be recorded. If both lead II and lead DE are present, only lead DE is recorded. The switch between IIauto and DEauto only occurs when a valid ECG signal is present and not when the cable is connected. Lead DE is displayed preferentially.

6.5.3 Performing Longterm ECG

Monitor

1. Press the **Monitor** key.
2. Press the softkey [LT-ECG]. The longterm ECG with monitoring function is displayed.

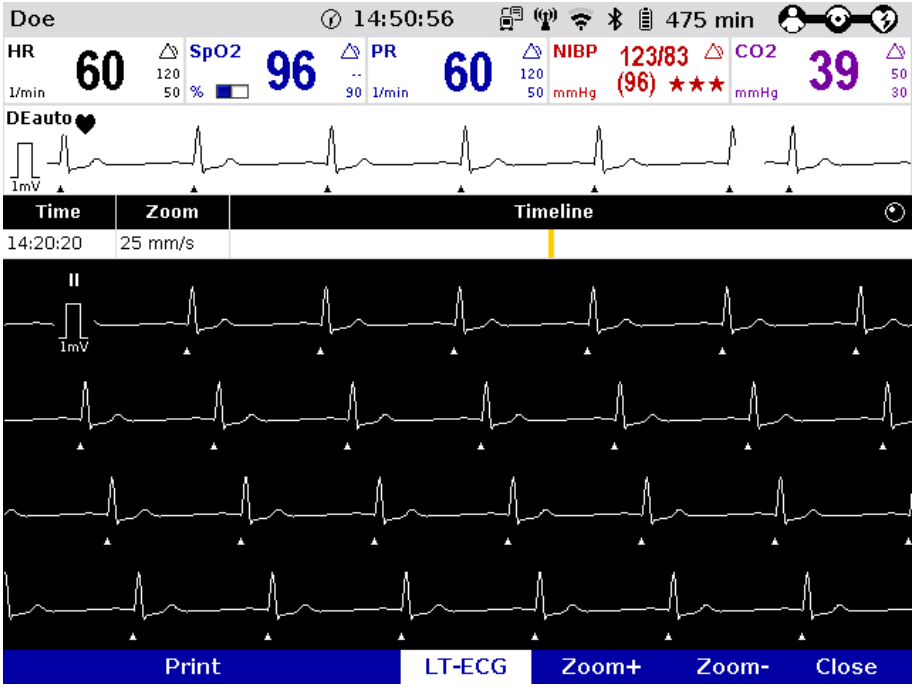

Fig. 6-18 Longterm ECG with monitoring function

3. Softkey [LT-ECG] is active (highlighted).
4. Select the required point in time on the timeline with the jog dial.
5. Select the required resolution of the longterm ECG with the softkeys [Zoom+] or [Zoom-].
6. Press the softkey [Print] to print out the longterm ECG displayed.
7. Pressing the softkey [LT-ECG] again deactivates the softkey and the parameter fields or the curve field can be selected with the jog dial and configured via the context menus.
8. Press the softkey [Close] to leave the view of the longterm ECG.

Note On the printout of the longterm ECG, the individual designations of the IBP curves are not printed.

6.6 Oximetry Monitoring (Option)

6.6.1 Information on Oximetry Monitoring

Oximetry is a non-invasive monitoring method for continuous measurement of the arterial oxygen saturation (SpO_2), in the blood. The specific reduction in the absorbance of oxygenated and deoxygenated haemoglobin is measured with light of different wavelengths by means of a photo sensor. Comparison of the values yields the SpO_2 values as percentage. Additionally, the oximetry measures the peripheral pulse rate (PR) per minute and the perfusion index (Pi) in percentage.

Note The vital parameters SpMet, SpCO and SpHb of the oximetry option are only available for corpuls3 devices that are equipped with Masimo rainbow SET® Technology (see chapter 6.6.2 Extended Oximetry Monitoring, page 131).

To increase patient safety and to be able to guarantee measurement accuracy, Masimo® sensors and intermediate cables were equipped with X-CAL® technology. The corpuls3 supports this function and issues alarms of different priorities to indicate that the sensor will expire soon (low priority) or that the sensor is expired (medium priority).

Two parameter fields for display of the numerical measurement values can be configured. The oximetry plethysmogram (pleth) can be displayed in a curve field.

The signal intensity is a quality criterion for the capturing of measurement values. The signal intensity is measured and displayed as a horizontal bar in the parameter field SpO_2 (see page 133 Fig. 6-21, item 1).



Warning

Loss of important information

The alarm limits must be verified every time the oximeter is used to ensure that these are appropriate for the patient currently being monitored.

Note If necessary, adapt individual alarm limits manually.

Note If for SpO_2 the alarm has been disabled or the lower alarm limit has been changed and then the parameter field is no longer displayed, the alarm will automatically be re-enabled and the alarm limit set to the default value.



Warning

Risk of inadequate therapy

If the accuracy of the oximetry measurement does not seem plausible (e. g. due to influences of movement, bright sunlight, Xenon OP lamps or due to photodynamic therapy with bilirubin lamps) check first of all whether there is any acute change in the patient's vital signs. Subsequently check whether the pulse oximeter works correctly. Refer to the list of approved accessories (see chapter 10.8 Approved Accessories, Spare Parts and Consumables, page 242) for a ambient shield ensuring interference-free measurement.



Warning

Risk of inadequate therapy

The oximeter may not be operated in the vicinity of ionising (radioactive) radiation, as this may falsify the readings.



Caution

No patient monitoring

Refer to the list of approved accessories (see chapter 10.8 Approved Accessories, Spare Parts and Consumables, page 242) for approved sensors from the company Masimo®. Sensors from other manufacturers are not supported by the device and are not permissible.

Note The license agreement allows an extension of the available oximetry measuring options which can be activated by a service technician.

Note Masimo SET® oximetry sensors can only be used in combination with an adapter cable (see chapter 10.8 Approved Accessories, Spare Parts and Consumables, page 242).

Note A low confidence of the measured value is indicated by a question mark instead of the alarm symbol in the upper right corner of the parameter field.



Note After connecting the oximetry sensor the oximeter calibrates automatically. This procedure may take up to 120 seconds for the oximetry measurement, during which an hourglass symbol is displayed in the upper right corner of the parameter field.



Note See the manufacturer's operating manual for further information. These manuals must be read carefully before use.

Note For additional information on operating the sensor see Appendix G Safety Information, page 325.

Note The oximeter is covered under one or more of the following U.S.A. patents: 5,758,644, 6,011,986, 6,699,194, 7,215,986, 7,254,433, 7,530,955. Other applicable patents are listed at: www.masimo.com/patents.htm

No implied license Possession or purchase of this Masimo rainbow SET® oximeter does not convey any express or implied license to use the device with unauthorized sensors or cables which would, alone or in combination with this device, fall within the scope of one or more of the patents relating to this device.

6.6.2 Extended Oximetry Monitoring

Extended oximetry monitoring options (available only with Masimo rainbow SET® Technology) include measurement of the methemoglobin level (SpMet®) and, depending on the used oximetry sensor, the level of carboxyhemogolobin (SpCO®) or the level of total hemoglobin (SpHb®) in the blood. Comparison of the values of oxygenated and deoxygenated hemoglobin yields the respective SpO_2-, SpCO- and SpMet values as percentage and, depending on the configuration of the oximetry sensor, the SpHb value in g/dl or mmol/l.

Respiration rate over Pleth (RRp®) It is also possible to measure the respiration rate (RRp®) via the plethysmogram. Advanced signal processing is used to analyse baseline, amplitude, and frequency changes to the plethysmographic waveform over the respiratory cycle to calculate respiration rate.

This option has to be activated in the user's device via a license.



Warning

Risk of inadequate therapy

Inaccurate measurement of respiration rate (RRp®) may be caused by:

- Improper sensor application
- Low arterial perfusion
- Motion induced artifacts
- Low arterial oxygen saturation
- Excessive ambient or environmental noise



Warning

Risk of inadequate therapy

Increased SpHb value: SpHb values above normal tend to increase the level of SpO_2. The level of increase corresponds approximately to the amount of SpHb that is present.



Warning

Risk of inadequate therapy

Increased SpMet value: The SpO_2 value may be decreased by levels of SpMet of up to approximately 10% to 15%. At higher levels of SpMet the levels of SpO_2 may tend to read in the low to mid 80s. When elevated levels of SpMet are suspected, a blood sample should be analysed (CO-Oximetry).

Note Simultaneous measurement of SpCO and SpHb is not possible, due to different sensor types (see chapter 10.8 Approved Accessories, Spare Parts and Consumables, page 242).

Note It is recommended to connect SpHb sensors to the corpuls3 only if needed, to avoid premature expiration of the sensor.

Note For additional information on operating the sensor see Appendix G Safety Information, page 325.

6.6.3 Preparing Oximetry Monitoring

Handling of a oximetry finger sensor is described below.

Warning

No patient monitoring

Read and understand the warning notices of the oximetry sensor manufacturer (see Appendix G Safety Information, page 325).

Warning

Wrong measurement results

Avoid to place the oximetry sensor on the same extremity as an NIBP cuff for non-invasive blood pressure monitoring, a catheter or an intravascular access.

Warning

Skin damage

With temperatures of more than 41°C one has to take care that the sensor is applied without excessive pressure, especially in patients with sensitive skin.

1. Connect the oximetry sensor to the intermediate cable and to the patient box.

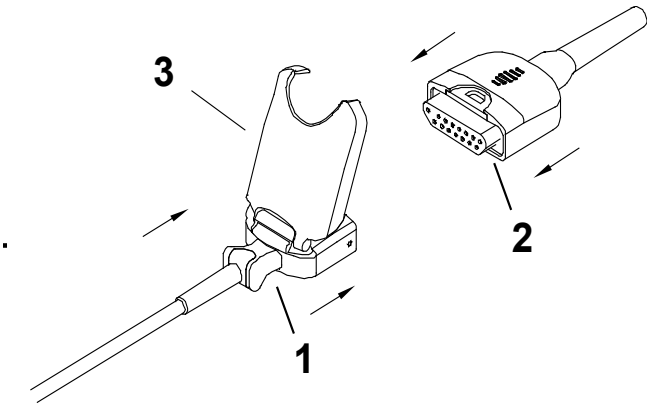

Fig. 6-19 Connecting the oximetry sensor on to the intermediate cable (Illustration may differ)

2. Attach the oximetry sensor to a finger/toe according to the manufacturer's instructions.

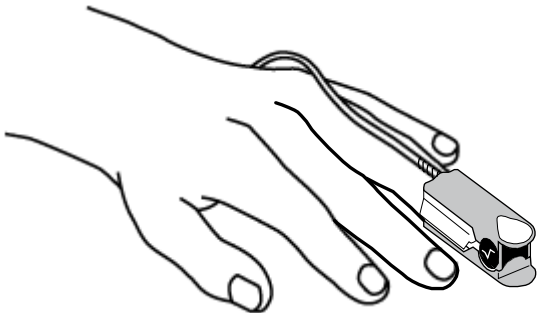

Fig. 6-20 Oximetry monitoring, attaching the oximetry sensor

Caution

No patient monitoring

The maximum application time of an oximetry sensor at one measurement site is 4 hours.

6.6.4 Performing Oximetry Measurement

Oximetry measurement begins automatically after the sensor has been attached.

1. If necessary, select the curve field for displaying course of SpO_2 measurement (pleth) and open the curve context menu.
2. Assign the plethysmogram to the selected curve field.
3. If necessary, select the parameter field for displaying oximetry values and open the parameter context menu.
4. Assign SpO_2 monitoring to the selected parameter field.

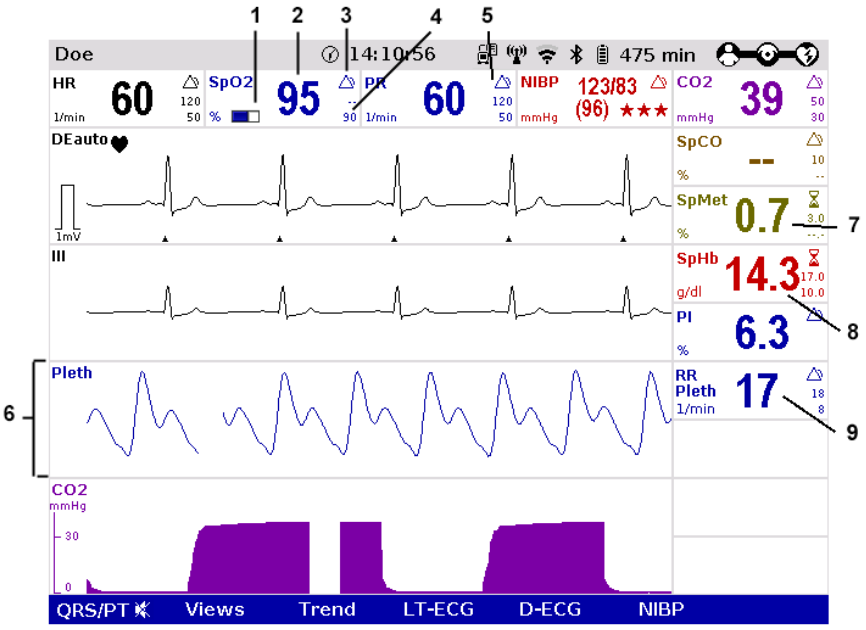

Fig. 6-21 Oximetry monitoring, configured screen (illustration may differ)

1 Bar for display of the signal intensity
2 Current SpO_2 value in percent
3 Hourglass symbol
4 Lower alarm limit
5 Symbol for switched-on alarms
6 Pleth curve (plethysmogram)
7 Current SpMet value in percent
8 Current SpHb value in g/dl
9 Current respiration rate over pleth

5. Check if the wave form of the pleth curve is displayed without artefacts.
6. If artefacts or a low signal intensity are displayed, correct the position of the oximetry sensor on the finger. See chapter 11 Procedure in Case of Malfunctions, page 243 for information on improving the signal.
7. If necessary, select in the main menu "Oximetry" ▶ "Settings" and adjust further oximetry configurations (available only with Masimo rainbow SET® Technology).

Printing the plethysmogram

The pleth curve can be printed out with the integrated printer. For further information on printout configuration see chapter 7.1.3 Printer settings, page 160.

To start or stop real-time printing press the **Print** key.

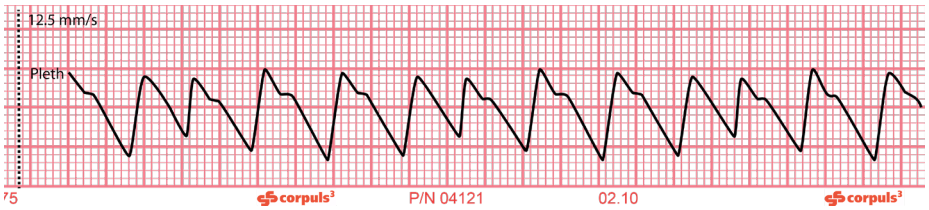

Fig. 6-22 Pleth monitoring, section of a printout

Averaging Time

Stability of measured SpO_2 values is in general an indicator for good signal quality. The stability of the measured values is influenced by the averaging mode used. The longer the averaging time, the more stable the readings will be. This is due to a dampened response as the signal is averaged over a longer period of time than this would be the case with shorter averaging times. Longer averaging times delay the response of the oximeter and reduce the measured variations of SpO_2 and pulse rate.

FastSat®

The FastSat® mode tracks rapid changes in arterial SpO_2 saturation with high fidelity. This allows for even more accurate and safe patient monitoring during the intubation phase. The mode FastSat® can be enabled via the parameter context menu.

Sensitivity

The sensitivity of the oximeter can be adjusted to the needs of the particular patient monitoring situation in three levels (called modes in the following). The following modes are available:

- Mode "Normal": This is the recommended sensitivity for typical monitoring situations in which patients are monitored continuously, as e. g. intensive care units.
- Mode "Adaptive Probe Off Detection® (APOD®)": This is the recommended sensitivity for situations where there is a high probability of the sensor becoming detached from the patient. It is also the suggested mode for care areas where patients are not visually monitored continuously. APOD® offers a safe and fast detection of erroneous pulse rate and arterial oxygen saturation readings when a sensor becomes inadvertently detached from a patient due to excessive movement.
- Mode "Maximum Sensitivity (MAX)": This level of sensitivity is recommended for patients with low perfusion in general or when the low perfusion message is displayed on the screen in APOD® or normal sensitivity mode. This mode is only recommended for care areas where patients are continuously monitored visually. When a sensor becomes detached from a patient, it will have compromised protection against erroneous pulse rate and arterial saturation readings.

Warning

Risk of inadequate therapy

When using the maximum sensitivity mode (MAX), the sensor-off-detection may be compromised. If the device is in this mode and the sensor becomes detached from the patient, false readings may occur due to environmental noise such as light, vibration and excessive air movement.

6.6.5 Adjusting the Representation of the Oximetry Parameters

Changing the sweep speed

The sweep speed of the display on the screen can be selected for the pleth curve.

The following sweep speeds can be configured:

- 12.5 mm/s
- 25 mm/s
- 50 mm/s

1. Select the pleth curve and open the curve context menu.
2. Select the required sweep speed in the curve context menu and confirm.
   Once the selection has been made, the program leaves the curve context menu automatically.

6.6.6 Monitoring Pulse Rate and Perfusion Index

During oximetry monitoring, the pulse rate (PR) and the perfusion index (Pi) are also evaluated and displayed on the screen. The perfusion index is calculated as the relation of arterial pulsatile signal to the non-pulsatile signal component. It serves to check the plausibility of the SpO_2 value and is indicated in 0.02% to 20%. The alarm limits of the pulse rate are configurable (see chapter 7.3.3 Setting Alarm Limits for Monitoring Functions Manually, page 173).

Note If necessary, adapt individual alarm limits manually.

1. If necessary, select the parameter field for display of the pulse rate or the perfusion index and open the parameter context menu.
2. Assign the pulse rate or the perfusion index to the selected parameter field.

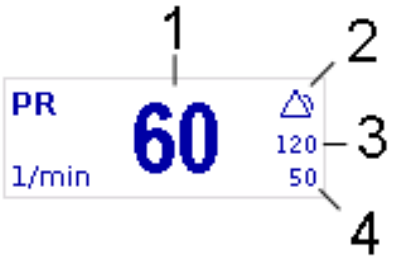

Fig. 6-23 Pulse rate parameter field

1 Current pulse rate in 1/min
2 Symbol for switched-on alarms
3 Upper alarm limit
4 Lower alarm limit

6.6.7 Monitoring respiration rate (Pleth)

In addition to oximetry monitoring, the respiration rate (RRp®) can be also displayed on the screen. The alarm limits of the pulse rate are configurable (see chapter 7.3.3 Setting Alarm Limits for Monitoring Functions Manually, page 173).

Note Per default, capnometry is configured as source of the respiration rate, the user OPERATOR can configure oximetry as source. Depending on what the source is, the colour of the parameter field varies and the source is indicated after the abbreviation RR (purple - CO2, blue - Pleth). If both options are connected to the device, priority can be given to one of the signals (see also chapter 7.2.2 Oximetry, page 167 and chapter 7.2.3 CO2, page 169).

1. If necessary, select the parameter field for display of respiration rate and open the parameter context menu.
2. Assign respiration rate to the selected parameter field.



Fig. 6-24 Parameter field Respiration rate over pleth

1 Current respiration rate in 1/min
2 Symbol for switched-on alarms
3 Upper alarm limit
4 Lower alarm limit

Note If no new respiration rate value has been calculated or in case of low confidence or low signal strength of the measured value, a question mark instead of the alarm symbol is displayed in the upper right corner of the parameter field.

Note If necessary, adapt individual alarm limits manually.

Note By default, respiration rate via CO2 is prioritised; if the respiration rate over pleth should be displayed, the priority can be changed via the parameter context menu or in the capnometry- or oximetry settings.

6.7 CO_2 Monitoring (option)

6.7.1 Information on CO2 Monitoring

CO_2 monitoring allows recording of the end-expiratory, end-tidal CO_2 concentration ($EtCO_2$) and provides information on ventilation, haemodynamics and metabolism in both intubated and non-intubated patients.

The semi-quantitative measurement method uses infrared technology and is based on the assumption that there is no CO_2 present in the patient's inspiratory respiratory gas.

Due to a condensation-repellent special coating in the disposable adapter, the capONE measurement system from the manufacturer NIHON KOHDEN does not require a warm-up phase and is therefore ready for measurement in 5 seconds maximum.

The capnometer, which operates according to the mainstream method, measures the CO_2 concentration in the patient's expiratory breath in real time. The CO_2 concentration, measured in mmHg or kPa, can be displayed on the screen as a capnogram in a curve field or as vital parameter.

The corpuls3 allows use of capnometry in intubated and non-intubated patients. The patient's respiration rate (RR) is measured as a further parameter.



Warning

False readings

By putting mechanical stress on the sensor or the sensor cable, the CO2 readings can be falsified.

Do not bend or pull at the sensor or sensor cable, or subject to similar mechanical stress.



Warning

Risk of inadequate therapy

Do not perform CO_2 monitoring near high frequency surgical devices. This may result in signal loss so that the patient can no longer be monitored.



Warning

Risk of inadequate therapy

The capnometer in corpuls3 is an additional function for intensive monitoring. Other vital parameters and clinical symptoms must be minded when using the capnometer on the patient.



Warning

Risk of cross contamination

To guarantee safe use and to prevent cross infections, disposable articles are to be used only once.



Warning

Risk of asphyxiation

The nasal/-oral adapter shall only be used on patients tolerating the adapter. The oral breath collector may come loose under extreme conditions and could be aspirated. The oral breath collector is radiolucent.



Warning

False readings

Do not use CO_2 monitoring in connection with re-inhalation anaesthesia systems. Re-inhaled carbon dioxide can lead to false low readings.

Caution

For capnographic monitoring of patients under 3 years of age or with a body weight of 10 kg, the disposable adapter for CO_2 endotracheal tube incl. insert for neonates has to be used (see chapter 6.7.3 Disposable Adapter for CO2 Endotracheal Tube incl. Insert for Neonates, page 139).

Note See the manufacturer's operating manual for further information.

No implied license Possession or purchase of this device does not convey any express or implied license to use the device with unauthorized sensors or cables which would, alone or in combination with this device, fall within the scope of one or more of the patents relating to this device.

Note Sensors and accessories by Nihon Kohden are covered under one or more of the following U.S.A. patents: 6,258,040; 7,462,154; 7,455,644; 7,445,602; 7,455,644; 7,445,602; 8,430,095; 8,636,956; 9,486,598; 9,655,543; 9,775,541.

Sensors and accessories by Nihon Kohden are covered under one or more of the following European patents: 2,196,236; 2,236,079.

Caution

Risk of inadequate therapy

Only use sensors and adapters indicated in the list of approved accessories (see chapter 10.8 Approved Accessories, Spare Parts and Consumables, page 242).

6.7.2 Preparing CO2 Monitoring

1. Attach the appropriate disposable adapter to the capONE sensor (item 3).
   Fig. 6-25 shows the three nasal adapters, Fig. 6-26 the endotracheal tube adapter.

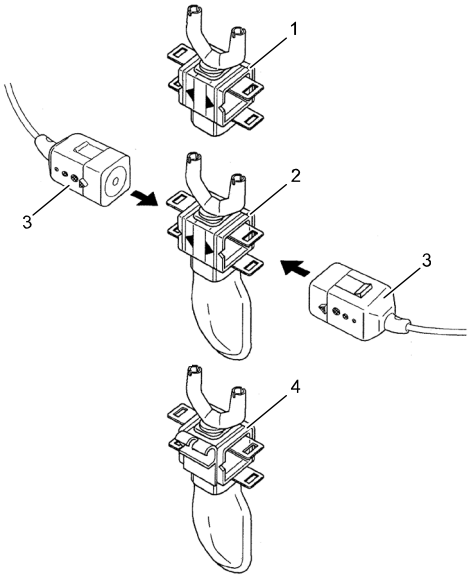

Fig. 6-25 CO_2 monitoring, nasal adapter

1 CO_2 disposable nasal adapter (YG-120T)
2 CO_2 disposable nasal/oral adapter (YG121-T)
3 capONE sensor
4 CO_2 disposable nasal/oral adapter, adaptable to an O_2 cannula (YG-122T)

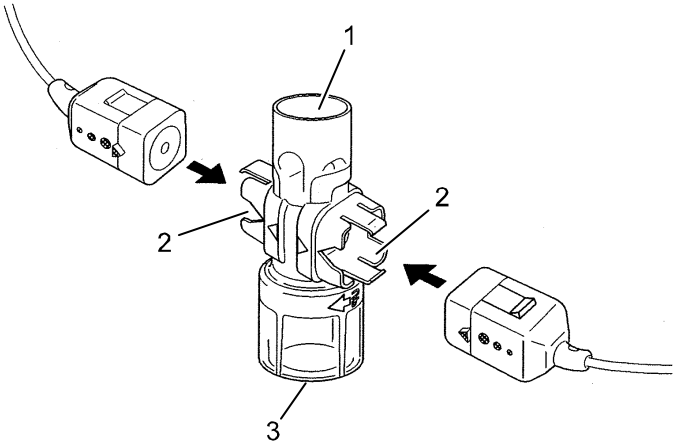

Fig. 6-26 CO_2 monitoring, disposable endotracheal tube adapter

1 Respirator/ventilation bag connection
2 CO_2 sensor connection
3 Endotracheal tube connection (YG-111T)

2. Attach the CO_2 sensor to the patient according to the manufacturer's instructions:

- Position the sensor cable behind the ears (Fig. 6-27, item 1) and slide the fastening ring (Fig. 6-27, item 2) loosely towards the chin.
- Attach the disposable adapter to the nose with the adhesive tape provided for this purpose (Fig. 6-27, item 3).
- The oral breath collector (Fig. 6-27, item 4) must not be more than 10 mm away from the lower lip.

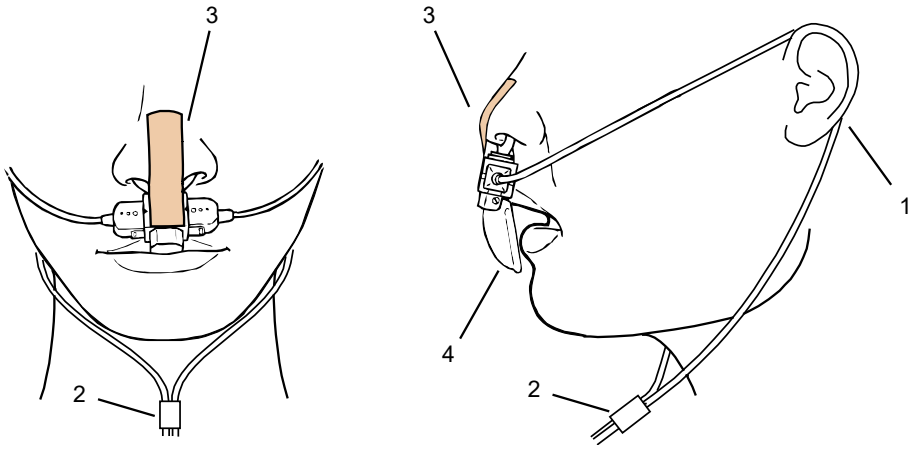

Fig. 6-27 Fitting the disposable CO_2 nasal(/oral) adapter on the patient

1 Cable positioning
2 Fastening ring
3 Adhesive tape
4 Oral breath collector

Warning

No patient monitoring

The CO_2 sensor and the patient box or CO_2 sensor and intermediate cable must not be connected or disconnected during operation.

6.7.3 Disposable Adapter for CO2 Endotracheal Tube incl. Insert for Neonates

Intended Purpose The disposable adapter for CO_2 endotracheal tube incl. Insert for neonates (P/N 04234.13) is intended for capnographic monitoring of the respiration in neonates and small children with a body weight of less than 12 kg. The adapter consists of two components: Disposable adapter for CO_2 endotracheal tube, main stream, capONE (P/N 04234.119) and an insert for neonates. By using the adapter in the system as a whole (adapter, mechanical ventilation aid, endotracheal tube), the total dead space volume is reduced by approx. 1 ml.

For information on the use, consult the instructions for use by Nihon Kohden as well as the user manual of the disposable adapter for CO_2 endotracheal tube incl. Insert for neonates (P/N 04230.10).

Note The disposable adapter for CO_2 endotracheal tube incl. Insert for neonates is a medical device that may only be used by medical personnel trained regularly on the product.

Note The disposable adapter for CO_2 endotracheal tube incl. Insert for neonates is **not** intended for use in combination with ventilators.



Warning

Malfunction due to contamination/damage!

In case of contamination/damage of/to the adapter with blood, bronchial secretion or similar or contamination/damage of the transparent measuring window (item 2) and in combination with the disposable adapter for CO_2 endotracheal tube incl. Insert for neonates, the sensor may supply wrong readings.

The disposable adapter for CO_2 endotracheal tube incl. Insert for neonates has to be exchanged or removed immediately, to guarantee continued ventilation by connecting the endotracheal tube with the ventilation aid.



Warning

Limited functionality/Risk of infection!

The disposable adapter for CO_2 endotracheal tube incl. Insert for neonates is an unsterile disposable article. To guarantee safe use and unlimited functionality and to prevent cross infections, the article must only be used once.



Caution

Restrictions of Use

The disposable adapter for CO_2 endotracheal tube incl. Insert for neonates may only be used if:

- it is in perfect condition;
- it is used as intended (see Purpose of Device):
- it is used exclusively with non-active ventilation aids;
- the instructions in the IFU by Nihon Kohden as well as in the user manual for the disposable adapter for CO_2 endotracheal tube incl. Insert for neonates (P/N 04230.10) are taken into account.

6.7.4 Performing CO2 Measurement

Measurement begins automatically after the sensor has been attached.

Note If in a vital parameter field the value "--" is displayed, this means that there has not yet been a value measured for that vital parameter, but the measurement is currently running.



Warning

No patient monitoring

The CO_2 sensor and the patient box or CO_2 sensor and intermediate cable must not be connected or disconnected during operation.

1. Select the curve field for display of CO_2 trend and open the curve context menu.
2. Assign CO_2 monitoring to the selected curve field (capnogram).

3. Select the parameter field for display of the end-expiratory CO_2 concentration and open the parameter context menu. Assign CO_2 monitoring to the selected parameter field.

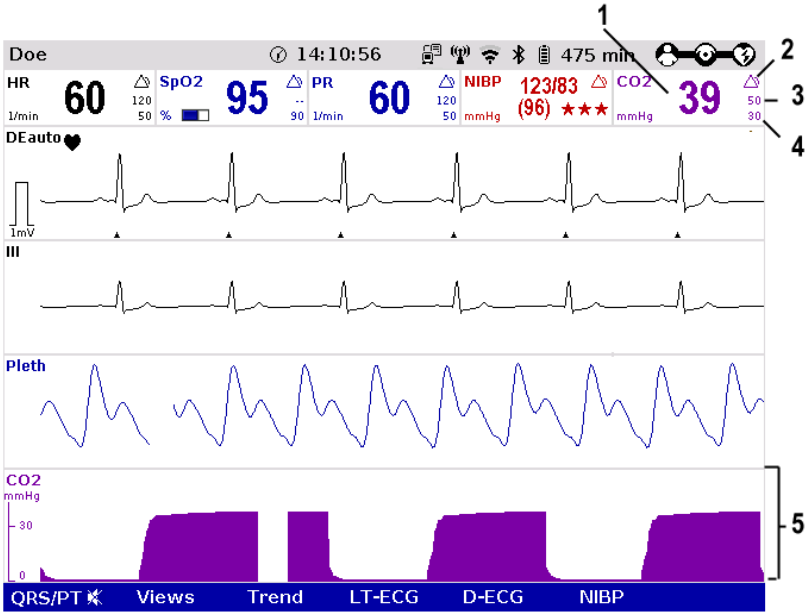

Fig. 6-28 CO_2 monitoring, configured screen

1 Current end-expiratory CO_2 concentration in mmHg
2 Symbol for switched-on alarms
3 Upper alarm limit
4 Lower alarm limit
5 CO_2 curve (capnogram)

Note If necessary, adapt individual alarm limits manually.

Note If the curves appear to be cut off at the top, check the scaling and set to an appropriate option (see chapter 7.2.3 CO2, page 169).

Note Outside the specified measuring range (0 mmHg - 100 mmHg or 0 - 13.3 kPa) the capnogram displays invalid values: two dashes in the parameter field and a dashed line in the curve field.

Note False or low etCO2 readings can be the result of:

- Resuscitation (impaired ventilation)
- Patients with obstructive lung diseases (COPD, Asthma)
- Patients with severe hypoventilation (dead space ventilation)

Therefore, examination via blood gas analysis is recommended.

Printing the capnogram The CO_2 curve can be printed out with the integrated printer. For further information on printout configuration see chapter 7.1.3 Printer settings, page 160.

To start or stop real-time printing press the **Print** key.

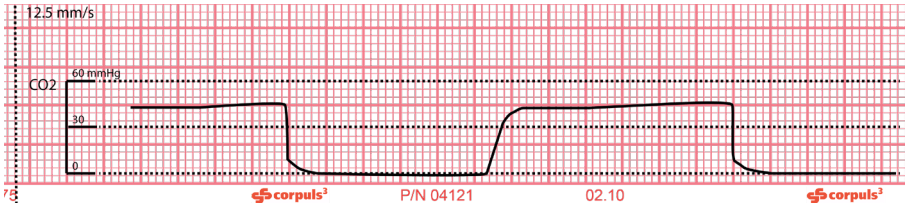

Fig. 6-29 CO_2 monitoring, section of a printout

Note The CO_2 nasal(/oral) disposable adapter may be used no longer than 24 hours.

Note After monitoring is finished, fixate the CO_2 sensor in the holder.

6.7.5 Adjusting the Representation of the CO2 Values

Changing the sweep speed

The sweep speed of the display on the screen can be selected for the configured curves.

The following sweep speeds can be configured:

- 3.13 mm/s
- 6.25 mm/s
- 12.5 mm/s
- 25 mm/s

1. Select the CO_2 curve and open the curve context menu.
2. Select the required sweep speed in the curve context menu and confirm. Once the selection has been made, the program leaves the curve context menu automatically.

Changing the scale

If the curves appear to be cut off at the top, check the scaling and set to an appropriate option.

1. Select the CO_2 curve and open the curve context menu or
2. Select the CO_2 parameter field and the parameter context menu.
3. Select the required scale in the context menu and confirm. Once the selection has been made, the program leaves the context menu automatically.

Changing the unit

CO_2 values can be displayed either in the measuring unit mmHg or in kPa.

1. Select the CO_2 curve and open the curve context menu or
2. Select the CO_2 parameter field and the parameter context menu.
3. Select the required measuring unit in the context menu and confirm. Once the selection has been made, the program leaves the context menu automatically.

6.7.6 Monitoring respiratory rate

With CO_2 monitoring, respiration rate (RR) is also assessed and can be displayed on the screen.

1. Select the parameter field for display of respiration rate (RR) and open the parameter context menu.
2. Assign respiration rate to the selected parameter field.

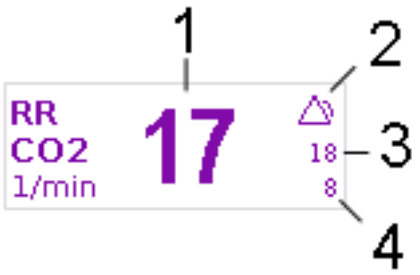

Fig. 6-30 Respiration rate parameter field

1 Current respiration rate in 1/min
2 Symbol for switched-on alarms
3 Upper alarm limit
4 Lower alarm limit

Note If necessary, adapt individual alarm limits manually.

6.8 Non-invasive Blood Pressure Monitoring (option)

6.8.1 Information on NIBP Monitoring

The NIBP technology integrated in corpuls3 is an OEM module from Sun Tech Medical Inc., Morrisville, NC, USA.
Further information: www.suntechmed.com.

Non-invasive blood pressure monitoring (NIBP) is used for routine monitoring of the blood pressure on an extremity. The pressure of a pulse wave in the blood is measured with the oscillometry method.

The systolic, diastolic and mean blood pressure values are recorded as measured values and displayed on the screen as a numerical value in mmHg. By configuring automatic intervals, continuous automatic monitoring is possible. A selection of predetermined settings (initial pressure) for adults, children and neonates is available.

The blood pressure monitoring system consists of the blood pressure cuff and the connecting hose which connects the cuff to the interface at the patient box.

The measurements can either be performed as individual measurements or automatically at configurable intervals (1 to 60 minutes).

Operating place

The position of the user during operation is near the patient and the device.

The corpuls3 can indicate the results of non-invasive blood pressure measurement and the current settings on a separate user interface. This enables rapid access to the most important functions via softkeys during use. Moreover, the value last measured is shown in a configurable parameter field.

One can choose between two views:

- Large view (Fig. 6-31)
- Trend view (Fig. 6-32)

The large view shows the last value measured in large numbers. To obtain a list of the last five measurements, it is possible to change to the trend view. Both views always indicate the time of measurement and a quality indicator.

NIBP quality indicator

The quality indicator consists of 3 star symbols which indicate good measurement quality when filled, poor quality when displayed as an outline. The quality indicator is displayed on the NIBP user interface, in the parameter fields "NIBP" and "NIBP sys", in the trend browser and on printouts of NIBP values. The quality indicator is transferred together with the NIBP values via telemetry and Bluetooth and can be displayed in corpuls.mission **LIVE** and corpuls.manager **REVIEW**.

Note

For paediatric and adult patient populations, blood pressure measurements made with this device are equivalent to those obtained by trained observers using the cuff/stethoscope auscultatory method within the limits prescribed by ANSI/AAMI SP10:2002(R)2008 (mean error difference of ± 5 mmHg or less, standard deviation of 8 mmHg or less) as well as EN1060-4:2004 and ISO 81060-2:2009.

Warning

Measuring errors due to interferences

The device is designed to function in the presence of a normal ECG sinus rhythm. With some heart dysfunctions (e.g. branch bundle block, arrhythmias, atrial fibrillation, ventricular fibrillation, premature atrial- or ventricular contraction, arteriosclerosis, presence of a pacer) as well as in case of poor perfusion, pregnancy (pre-eclampsia, pregnancy hypertension), diabetes, kidney diseases, advanced age of the patient or movement of the patient (shaking, the chills etc.) the non-invasive blood pressure module may not be able to get correct measurement values.

Take into account interferences when assessing the measurement, if necessary, measure manually.

Warning

Delayed effect of emergency drugs

If the blood pressure cuff is placed on an extremity into which an intravascular access has already been inserted, this may affect the administration of drugs.

In this case, the blood pressure cuff should be used on another extremity, if possible.



Warning

Impairment of intravascular therapy or -monitoring

If the blood pressure cuff is placed on an extremity into which an intravascular access or another monitoring sensor has already been inserted, this can impair their function.

In this case, the blood pressure cuff should be used on another extremity, if possible.



Caution

Measuring errors due to interferences

The measuring site, the position of the patient (standing, sitting or laying down), exertion and the physical condition of the patient (stress, urge to urinate, ingestion of coffee or nicotine) can influence the measurement.

The middle of the cuff should be at the level of the heart. During the measurement, the patient should sit or lie calmly and relaxed, back and arm supported, legs not crossed, feet flat on the floor. The patient should not talk or tense the arm musculature. Ideally, the patient can spend 5 min in calm before the measurement.

Take into account interferences when assessing the measurement, if necessary, measure manually.



Caution

Measuring errors due to interferences

Microwave radiation in the immediate vicinity may interfere with the function of the device.

Eliminate interferences, if possible.

Take into account interferences when assessing the measurement, if necessary, measure manually.



Caution

Measuring errors due to interferences

Interferences influencing the blood pressure cuff (sensor) or other components can lead to erroneous measurements. Such interferences can be caused by strong acoustic pressure, or e.g. by extreme vibrations during patient transport.
Take into account interferences when assessing the measurement, if necessary, measure manually.



Caution

Risk of inadequate therapy

With temperatures outside the specified limits, the measurements may not be reliable (see Table A-10, page 302).



Caution

No patient monitoring

Only use NIBP cuffs mentioned in the list of approved accessories (see chapter 10.8 Approved Accessories, Spare Parts and Consumables, page 242).

To open the NIBP user interface, press the softkey [NIBP] in monitoring mode. By default, the NIBP user interface starts in the large view:

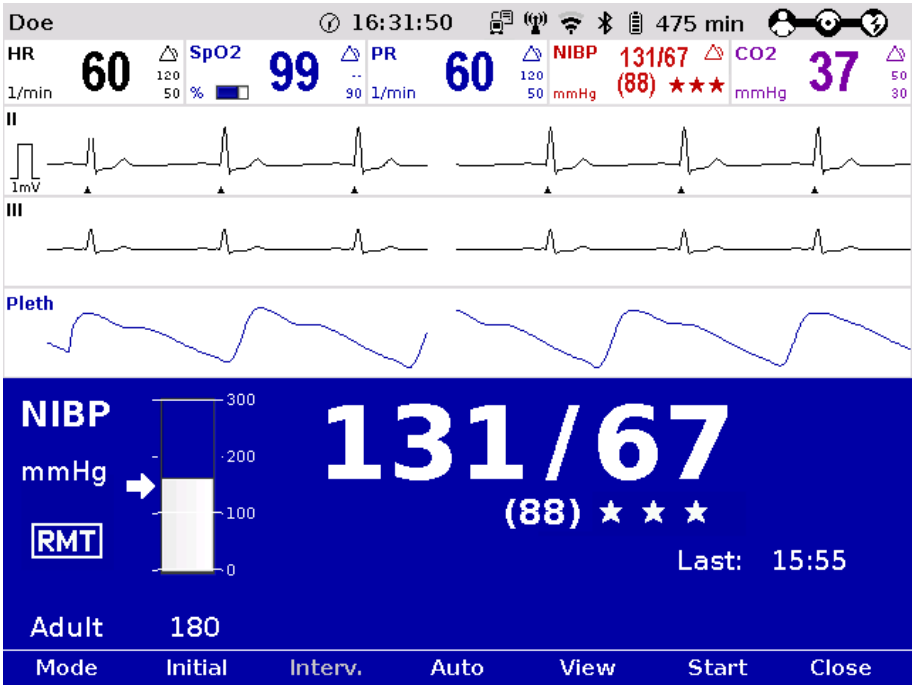

Fig. 6-31 NIBP user interface in large view

Press the softkey [View] to switch to the trend view.

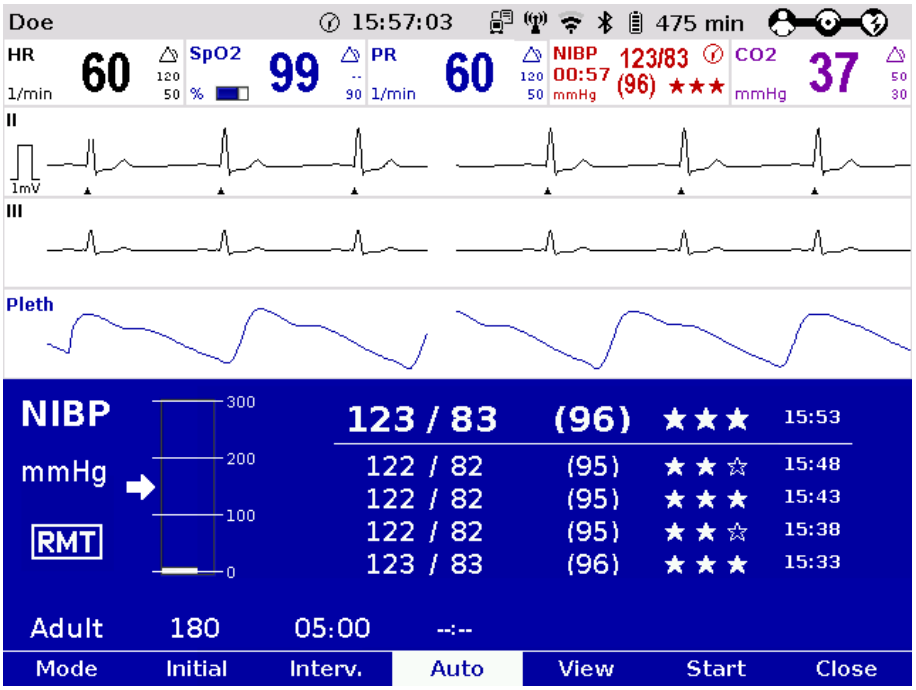

Fig. 6-32 NIBP user interface in trend view

Three operating modes can be set with the softkey [Mode]:

- Adult (Adult)
- Child
- Neonate

Depending on the operating mode the initial pressure of the measurements is pre-set on the device:

- adult: 180 mmHg
- child: 120 mmHg
- neonate: 90 mmHg

The initial pressure automatically adapts to the patient after the first measurement. This can be changed manually with the softkey [Initial] and with the jog-dial within the following pressure range (see also chapter 7.4.13 Configuration of Non-Invasive Blood Pressure Measurement (NIBP) (Persons Responsible for the Device), page 193):

- adult: 120 - 280 mmHg
- child: 80 - 170 mmHg
- neonate: 60 - 140 mmHg

The selected pressure limit is marked with an arrow on the pressure scale. The pressure scale always shows the current pressure in the NIBP cuff.

NIBP quality indicator

The quality of the performed measurement is indicated by up to 3 star symbols in the NIBP user interface.



Caution

Measurement error due to noisy ECG signal

In the following situations, the functionality of the quality indicator can be impaired:

- Noise in the ECG signal (interference)
- Some types of arrhythmias (irregular ECG signal)
- Cuff on leg (pulse delay tolerance)
- Measurement in children (pulse delay tolerance)

If the quality indicator shows no or just 1 star symbol, check the fit and position of the cuff or the positioning of the arm and correct, if necessary. If necessary, the user can disable the RMT function in the NIBP settings.

SunTech R-wave Motion Tolerance (RMT)-Technology uses the monitoring ECG signal to qualify the validity of oscillometric pulses for an enhanced level of motion tolerance on patients in transport situations.

Start/Stop via parameter context menu

If in monitoring mode the parameter field "NIBP" is displayed, the blood pressure measurement can also be started or stopped via the parameter context menu.

6.8.2 Preparing Blood Pressure Monitoring

NIBP monitoring on the upper arm is described below:

1. Select the NIBP cuff which is appropriate for the patient's arm girth.
2. Connect the NIBP cuff to the connecting hose, if necessary.

3. Tightly fit the deflated NIBP cuff around the patient's exposed upper arm so that it firmly surrounds the arm. The NIBP cuff should not exert any pressure on the blood vessels. The NIBP cuff must not fit too loosely. The lower edge of the NIBP cuff should be positioned approx. 2 cm above the crook of the arm.

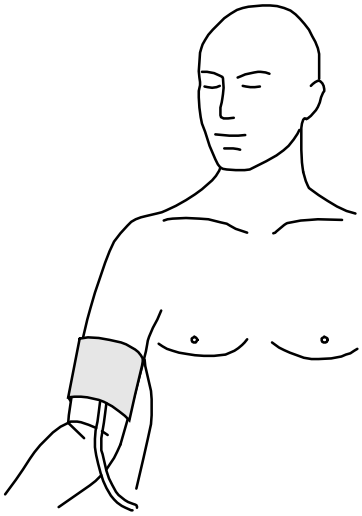

Fig. 6-33 NIBP monitoring, attaching the NIBP cuff

Caution

Poor perfusion in neonates due to inappropriate patient mode

If an inappropriate patient mode with to high cuff pressure is used on neonates, this can lead to poor perfusion.

When using NIBP cuffs for neonates, select the patient mode "Neonate".

Caution

Poor perfusion due to wrong handling

A too high cuff pressure due to a bent hose or too frequent measurements can lead to poor perfusion in patients.

Make sure by observation that the blood circulation is not impaired in the patient.

Caution

Injury due to wrong handling

Do not apply the cuff over a wound or at the arm on the side where a mastectomy has been performed.

Caution

Measurement error due to wrong handling

The INDEX-arrow printed on the NIBP cuff must fit within the designated area (RANGE), also printed on the NIBP cuff.

If this is not possible, a larger or smaller NIBP cuff has to be used.

Caution

Measurement error due to wrong handling

When performing the measurement, make sure that the NIBP cuff is on the level of the heart. The marking "ARTERY" printed on the inside of the cuff has to be aligned centrally and with the arrow pointing down to the arteria brachialis. The distance between the elbow joint and the NIBP cuff has to be 2 cm.

Caution

Measurement error due to wrong handling

Avoid squeezing, bending or reducing the diameter of the pressure hose connected to the NIBP cuff.

6.8.3 Performing Individual Blood Pressure Measurement

Caution

Measurement error due to wrong initial pressure

Before starting the NIBP measurement, make sure that the selected initial pressure is appropriate for the patient.

Adjust the initial pressure of the monitoring at approx. 30 mmHg above the expected systolic value or use the default settings.

1. In monitoring mode press the softkey [NIBP].
2. Press the softkey [Mode] repeatedly until the required mode "Adult", "Child" or "Neonate" appears.
3. To start an individual measurement, press the softkey [Start].
4. The NIBP cuff is inflated and measurement is performed automatically.
5. A measurement in progress can be interrupted with the softkey [Stop].

Note Immediately after the measurement the softkeys are greyed out. Another measurement is possible only after 5 seconds.

To additionally display the measured value in a parameter field exit the NIBP user interface with the softkey [Close].

1. Select a parameter field for display of the non-invasive blood pressure and open the parameter context menu.
2. Assign NIBP monitoring to the selected parameter field.
3. Alternatively, individual parameter fields can be configured to display the systolic (NIBP sys), diastolic (NIBP dia) and the mean arterial (NIBP MAP) pressure values.

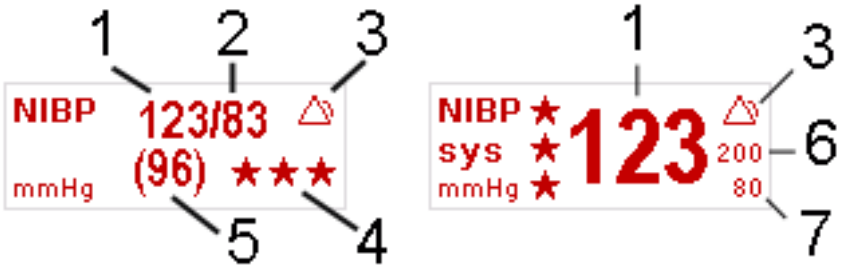

Fig. 6-34 NIBP monitoring parameter fields

1 Systolic value
2 Diastolic value
3 Symbol for switched-on alarms
4 NIBP quality indicator
5 Mean arterial pressure
6 Upper alarm limit
7 Lower alarm limit

Note If necessary, adapt individual alarm limits manually.

Start/Stop via parameter context menu If in monitoring mode the parameter field "NIBP" is displayed, the blood pressure measurement can also be started or stopped via the parameter context menu.

6.8.4 Performing Blood Pressure Interval Monitoring

Warning

Injury due to wrong handling

Make sure that the blood circulation is not impaired in the extremity to which the NIBP cuff is attached.

Note

If a time value for interval monitoring is configured and the checkbox "Enabled" is ticked, (see chapter 7.4.13 Configuration of Non-Invasive Blood Pressure Measurement (NIBP) (Persons Responsible for the Device), page 193), the automatic interval measurement begins immediately when the softkey [Start] is pressed.

To configure interval monitoring manually, proceed as follows:

1. In monitoring mode press the softkey [NIBP].
2. Press the softkey [Mode] repeatedly until the required mode "Adult", "Child" or "Neonate" appears.
3. Press softkey [Auto]. The softkey [Auto] remains selected.
4. Change the interval with the softkey [Interv.] or leave at default value.
5. To start an interval measurement press the softkey [Start].

While the first interval measurement is performed, the inscription above the softkey [Auto] shows four dashes. After that, a countdown above the softkey [Auto] shows the remaining time until the next interval measurement. This countdown is also displayed in the parameter field on the left below "NIBP". It is no longer necessary to call up the NIBP user interface to see if an interval measurement is active. Also, a clock symbol alternating with the alarm symbol in the upper right corner of the parameter field indicates that the interval measurement is active and that an automatic measurement is being prepared.

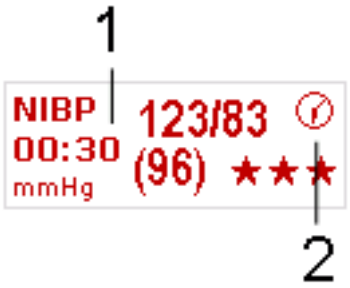

Fig. 6-35 NIBP parameter field with active interval measurement

1 Countdown for the interval measurement
2 Clock symbol

6. To quit the interval measurement, press the softkey [Auto]. A measurement in progress can be interrupted with the softkey [Stop].

If the NIBP measurement is interrupted, the inscription above the softkey [Auto] shows four dashes instead. The pressure in the NIBP cuff is then released immediately.

Note

During the interval measurement it is possible to perform an individual measurement manually at any time between two automatic interval measurements by pressing the softkey [Start].

Start/Stop via parameter context menu

If in monitoring mode the parameter field "NIBP" is displayed, the blood pressure measurement can also be started or stopped via the parameter context menu.

6.9 Invasive Blood Pressure Monitoring (IBP) (Option)

6.9.1 Information on IBP Monitoring

With the IBP function, various pressures can be measured within the context of intensive medical care. This includes, among others, arterial pressure, central venous pressure or intracranial pressure.

Two interfaces are available which can be assigned as single channels or as double channels, respectively. For usage as a double channel, an IBP-Y-adapter cable is needed. Consequently, up to four different invasive pressure measurements can be performed simultaneously. The recorded pressure values can be displayed on the screen either as numerical parameters and/or as a curve.

The following table gives an overview of the current assignment:

Connection	Assignment	
	Single pressure channel	Double pressure channel
P1 P2	"P1"	"P1" and "P2"
P3 P4	"P3"	"P3" and "P4"

Table 6-4 IBP monitoring, pressure channel assignment

Special convertible adapters for transducer cables from established manufacturers are available for the corpuls3. The following transducers are approved for use with the adapter cables 04233.02 and 04233.04: B.Braun Combitrans, Smiths/Medex LogiCal, Codan/pvb DPT-6000er series, Codan/pvb xtrans DPT-9000er series, Edwards TruWave PX600er series (only 1-fold).

Your sales representative can inform you which types of transducers can be connected. The list of accessories (see chapter 10.8 Approved Accessories, Spare Parts and Consumables, page 242) contains approved accessory equipment for IBP monitoring.



Caution

Risk of confusion of information

The corpuls3 may not be used simultaneously on two or more patients.

Note For further information see the operating instructions from the manufacturer of the transducer system.

Note The following description of invasive blood pressure monitoring only takes into account the operating steps pertaining to the corpuls3 and **not** the handling of the individual transducer systems. Read and follow the operating instructions and accompanying documents of the respective manufacturer.

Note When using the IBP cables, take care to provide strain relief by making a small loop. If the IBP cables are not used, disconnect them from the patient box and store in the accessory bag.

Note Disposable items of the transducer system must not be re-used under any circumstances. Read and follow the operating instructions and accompanying documents of the respective manufacturer.

6.9.2 Preparing Invasive Blood Pressure Monitoring

1. Connect the plug of the first transducer cable to the "P1 P2" socket at the patient box.
2. Connect the plug of the second transducer cable to the "P3 P4" socket at the patient box if one or more invasive pressure measurements are to be taken.
3. Open the transducer system to balance the static and atmospheric pressure.
4. Perform zero calibration of the transducer cable:
   Select in the main menu "IBP" ► "Calibr. P1" and confirm the calibration with the jog dial (for further information, see chapter 7.2.4 IBP, page 170).

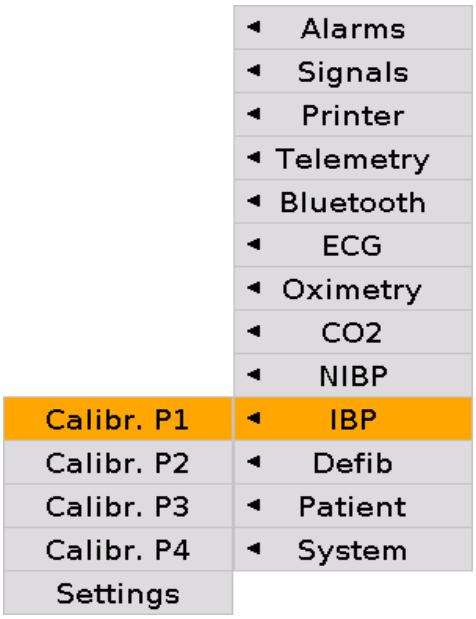

Fig. 6-36 IBP calibration

5. Repeat steps 3 to 4 to calibrate further transducer cables.
6. If auto-scaling of the display of the pressure channel is not required, adjust the display range in the main menu "IBP" ► "Settings" (for further information see chapter 7.2.4 IBP, page 170).

Note The message “NON CAL” in the parameter field and/or in the curve field indicates an uncalibrated measuring channel (P {measuring channel}). No alarm is triggered and no measuring channel trend is recorded.

Note Atmospheric pressure must be present on the transducer during calibration.

Note Calibration is completed after approx. 5 seconds. In case of an error, a technical alarm is triggered. In this case, sources of error are to be eliminated and the calibrating measures to be repeated, if necessary.

Note If no transducer is connected or if the transducer is loose, the technical alarm "IBP P[X] `sensor loose`" is triggered. The prerequisite in this case is that a transducer has already been connected and calibrated previously.

Note The shunt valve of the transducer should be positioned approximately at the level of the right atrium (approximately in the area of the middle axillary line).

During cranial pressure measurement, the shunt valve should be aligned with the upper edge of the ear. Any deviation from the prescribed position may invalidate the values.

Note The hydraulic system of the transducer must be de-aerated before invasive pressure measurement is performed. Read and follow the operating instructions and accompanying documents of the respective manufacturer.

6.9.3 Performing Invasive Blood Pressure Monitoring

1. Invasive blood pressure monitoring starts automatically after application of the transducer(s).
2. Select the curve field for display of the pressure curves and assign the corresponding pressure curve (P1-P4) via the curve context menu.
3. If necessary, select a parameter field for display of the invasive pressure measurements and assign the corresponding P value (P1-P4) via the parameter context menu.
4. If required, assign a designation of the measuring site to the parameter- or curve field:

IBP: Invasive (Blood-) Pressure
AP: Arterial blood pressure
VP: Venous blood pressure
ICP: Intracranial pressure

Warning

Misinterpretation of the curve due to wrong scaling!

If the user only has the pressure curve displayed without the pertaining numerical value as vital parameter, wrong scaling may cause misinterpretation of the readings.

Check the curve for plausibility and/or call up the parameter field additionally to display numerical values.

Note If necessary, adapt individual alarm limits manually.

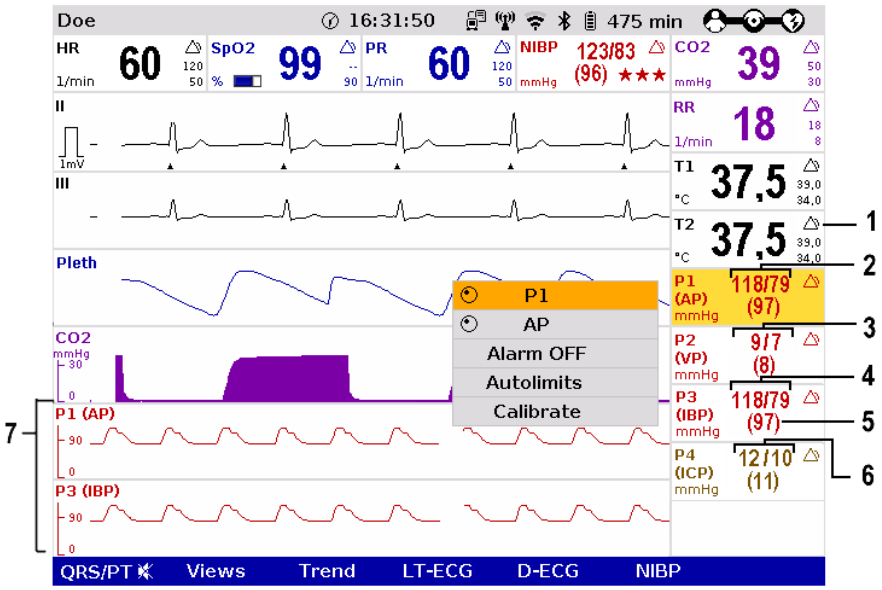

Fig. 6-37 IBP monitoring, configured screen

1 Symbol for switched-on alarms
2 Current arterial systolic and diastolic pressure in mmHg
3 Current venous pressure in mmHg
4 Current systolic and diastolic pressure in mmHg
5 Current mean arterial pressure in mmHg
6 Current intracranial pressure in mmHg
7 Pressure curves (P1 and P3) in mmHg

The pressure curves can be printed out with the integrated printer. For further information on printout configuration see chapter 7.1.3 Printer settings, page 160.

To start or stop real-time printing press the **Print** key.

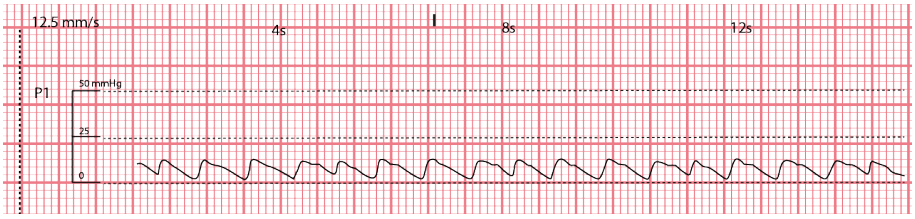

Fig. 6-38 IBP monitoring, section of a printout

Invasive blood pressure curve P1

6.10 Temperature Monitoring (Option)

6.10.1 Information on Temperature Monitoring

Temperature monitoring enables continuous measurement and monitoring of the body core temperature (e. g. in a hypothermic patient) or the surface temperature of the skin (e. g. following therapeutic hypothermia in the post-resuscitation phase).

Temperature Up to two temperature values can be measured by means of temperature sensors and displayed as numerical values: body core temperature rectally and/or oesophageally and surface temperature.



Caution

No patient monitoring

Only use YSI sensors of the series 400 or sensors compatible with those, as indicated in the list of approved accessories (see chapter 10.8 Approved Accessories, Spare Parts and Consumables, page 242).

The measurement range lies between 12.0°C and 50.0°C. The temperature is displayed in °C.

Temperature values above the measurement range are indicated as "--.-", temperature values below the measurement range are indicated as "Low".



Caution

Risk of inadequate therapy

If temperatures below 12°C are measured the alarm "[X] sensor loose" may be issued.

Note For further information read the operating instructions of the temperature sensor's manufacturer.

6.10.2 Preparing Temperature Monitoring

1. Connect the plug of the first temperature sensor to the "Temp-1" socket at the patient box.
2. Connect the plug of the second temperature sensor to the "Temp-2" socket at the patient box, if a second temperature is to be measured.
3. If necessary, put the protective cover over the temperature sensor and insert the sensor esophageally, rectally or tympanally or place on the surface on the skin and fixate with tape.

6.10.3 Performing Temperature Monitoring

Measurement begins automatically after the sensor has been attached.

1. Select the parameter field for display of the first temperature value and open the parameter context menu.
2. Assign T1 monitoring to the selected parameter field.

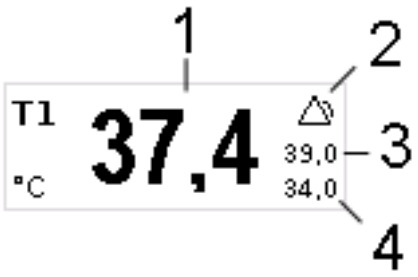

Fig. 6-39 Temperature monitoring parameter field

1 Current temperature value in °C
2 Symbol for switched-on alarms
3 Upper alarm limit
4 Lower alarm limit

Note If necessary, adapt individual alarm limits manually.

3. If measurement of a second temperature value is necessary, select the parameter field of the second temperature value and open the parameter context menu.
4. Assign T2 monitoring to the selected parameter field.

7 Configuration

Various different settings of the corpuls3 can be configured:

- System settings
- Monitoring functions (ECG, Oximetry, CO_2, NIBP, IBP)
- Alarms
- Advanced settings (for persons responsible for the device)

Note The corpuls3 has user administration. Certain settings are therefore only accessible for users with a higher authorisation level (such as persons responsible for the device or service technicians). For default users, certain configuration fields are greyed out and cannot be selected. The access to certain functions as e. g. manual defibrillation or pacer therapy can be restricted via PIN number by the person responsible for the device.

Note Permanent saving of changes in the configuration can only be performed with the corresponding authorisation. If modifications made are not saved in the system settings (see chapter 7.4.2 General System Settings (Person responsible for the device), page 175), all the adjustments will be lost when the corpuls3 is switched off.

The corpuls3 always starts at the user level DEFAULT.

Note The configuration dialogues are opened with the jog dial by navigating in the main-/submenu (see chapter 4.3.3 Main Menu, page 53).

The settings are selected and confirmed with the jog dial (see chapter 4.1.1 Operating Elements and LEDs on the Monitoring Unit, page 37).

7.1 Configuring the System

7.1.1 General System Settings (User DEFAULT)

The following general system settings can be configured:

- Screen settings/Display
- Master data
- Time/Date

1. Select in the main menu "System" ► "Settings". The configuration dialogue opens.

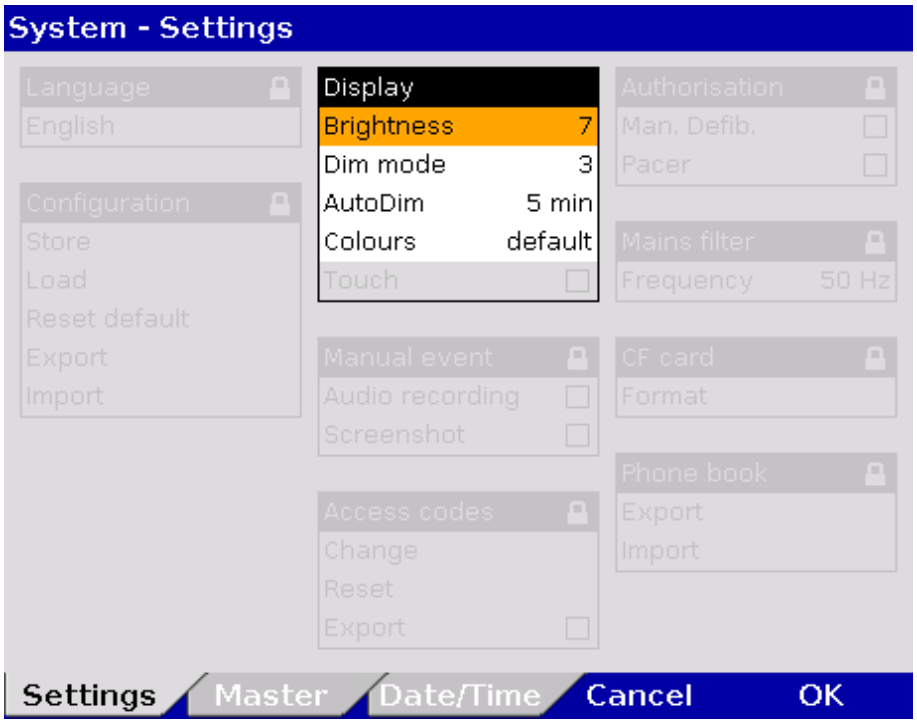

Fig. 7-1 System settings, user level DEFAULT

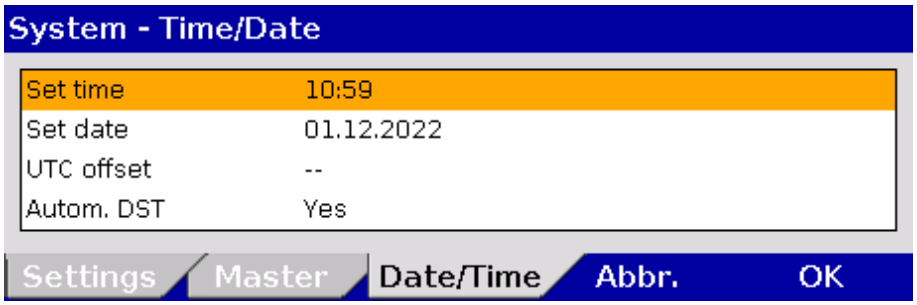

Fig. 7-2 Settings Date/Time

2. Select the settings. Table 7-1 shows the possible values.
3. The settings for date and time are now located on a separate tab.
4. To confirm the settings and close the configuration dialogue, press the softkey [OK].
   To retain the previous settings and close the configuration dialogue, press the softkey [Cancel].

Note Some configuration fields can only be edited if the user has the necessary authorisation. They are greyed out for the user DEFAULT.

Note Settings can only be configured when the modules are connected mechanically or in range via radio connection.

Field	Setting	Values	Increments
Display	Brightness	0 (dark) to 10	1
	Dim mode	0 (dark) to 10	1
	AutoDim	Off, 1 to 15 min	1
	Colours	default/night/inverted	–

Table 7-1 Values for system settings

Field	Setting	Values	Increments
Time/Date	Set time	Hours:minutes	0-23:00-59
	Set date	DD.MM.YY	from 2000
	UTC offset	Hours:minutes	-12 - +13:00, 15, 30, 45
	Autom. DST	Enabled, disabled	-

Table 7-2 Settings Date/Time

Note The UTC offset (time zone) and the automatic daylight saving time (DST) have to be configured before setting the time. The UTC and time are printed on the protocol. The settings are saved with the softkey [OK]. The minute values can be only be configured in 15-min steps.

Note The UTC offset can be configured from -12:00 to +14:00 hours. So, selection of the correct time zone is possible worldwide.

Automatic changeover to DST If a daylight saving time is available in the deposited table, the user can activate the automatic changeover to DST. If no DST is available, the field is without function.

Note After an update to version 4.3.0, the former configuration of the UTC offset is not visible. However, the former configuration stays active until a new time zone is configured.

Screen The following settings are possible for the display:

- brightness level of the backlit screen (not in nightvision mode).
- dimmed brightness level for energy saving (not in nightvision mode).
- time interval after which the screen switches from normal to dimmed in the absence of operating actions or alarms (not in nightvision mode).
- Default, night or inverted video display on the screen.

Note The corpuls3 never switches to AutoDIM (energy saving) mode in defibrillation-, pacer- or nightvision mode.

Via the configuration page "Master" the master data can be edited (see chapter 8.4 Master data, page 197).

7.1.2 Configuration of Views

The following settings can be configured:

- number and type of the curves displayed
- number and type of the parameters displayed
- pre-set views

Curves

1. Select in the main menu "Signals" ► "Curves". The configuration dialogue opens.

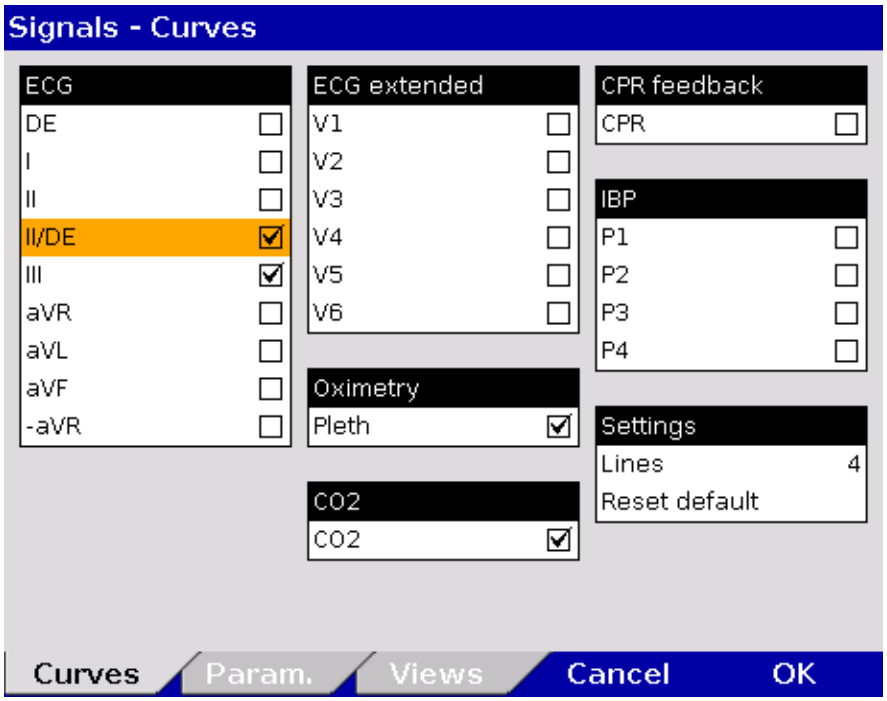

Fig. 7-3 Displaying curves

2. In the group “Settings” in the field "Lines" the required number of lines (3 to 6 lines) can be selected. The selected number of curves is displayed on the monitor.
3. Select the field “Reset default” to set the configuration back to the last settings before opening this configuration dialogue. Changes can so be undone without having to close the configuration dialogue.
4. Select the required ECG leads and curves of the monitoring functions Pleth, CO_2, IBP and CPR for display on the monitor.
5. To confirm the settings and close the configuration dialogue, press the softkey [OK].
   To retain the previous settings and close the configuration dialogue, press the softkey [Cancel].

Parameters

1. Select in the main menu "Signals" ► "Parameters". The configuration dialogue opens.

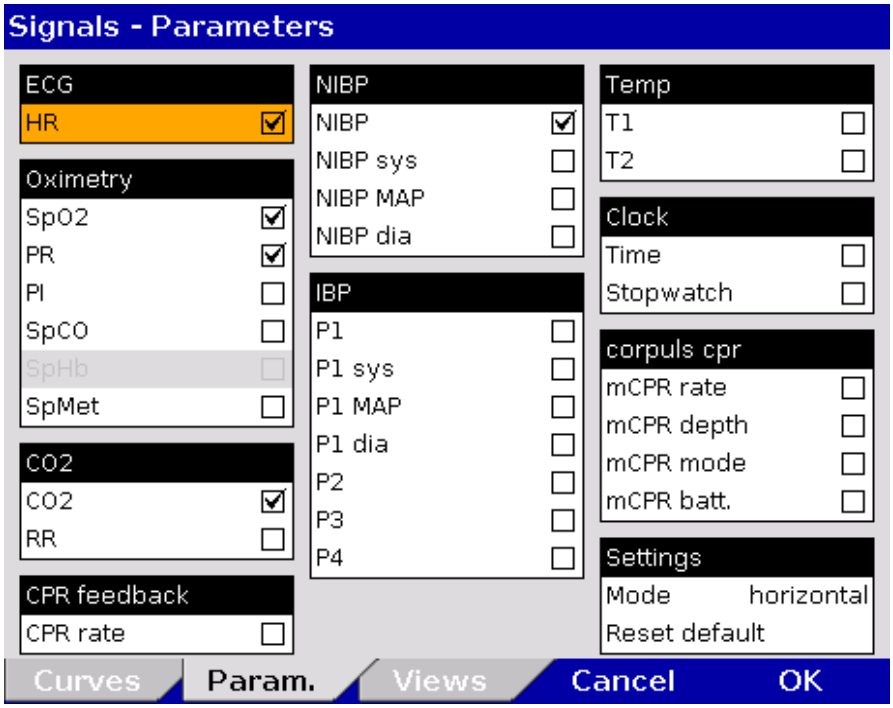

Fig. 7-4 Displaying parameter fields

2. Select the arrangement of the parameters in the group "Settings" for the following fields:
   - none,
   - horizontal,
   - vertical,
   - horizontal and vertical,
   - big 4,
   - big 6,
   - big 8,
3. Select the field “Reset default” to set the configuration back to the last settings before opening this configuration dialogue. Changes can so be undone without having to close the configuration dialogue.
4. Select the parameters to be displayed. With the option "big 6" or "big 8", only one curve can be displayed, as the entire screen is used to display the big parameter fields. With the option "big 4", 2 or 3 curves can be displayed.
5. To confirm the settings and close the configuration dialogue, press the softkey [OK].
   To retain the previous settings and close the configuration dialogue, press the softkey [Cancel].

All available parameters can be displayed in "big 4", "big 6" or "big 8" view with a corresponding larger font, their respective colours, designations and alarm parameters remain the same.

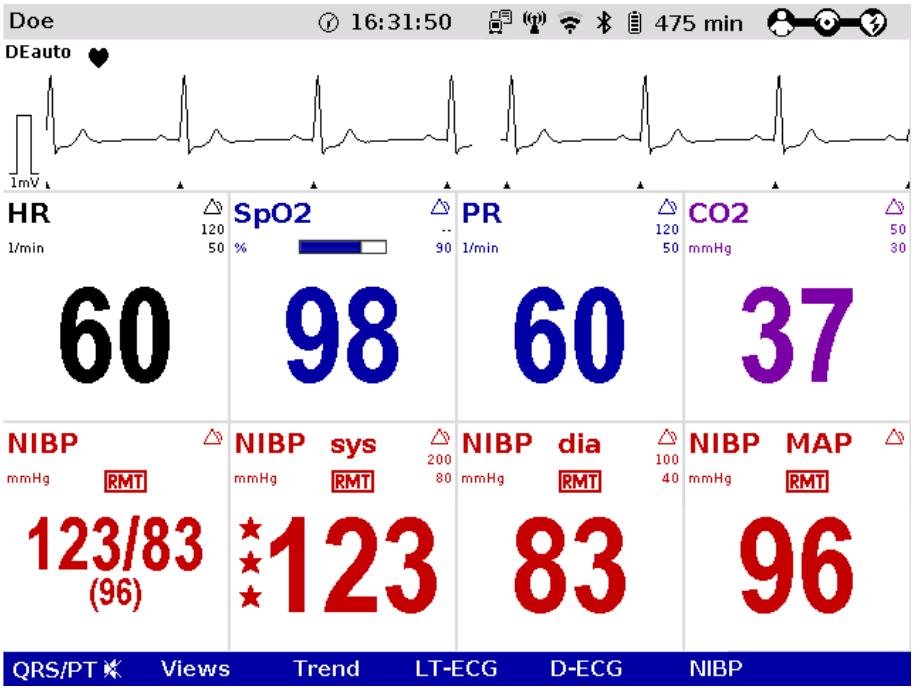

Fig. 7-5 Big parameter fields

Selecting pre-configured views

1. Select in the main menu "Signals" ► "Views". The configuration dialogue opens.

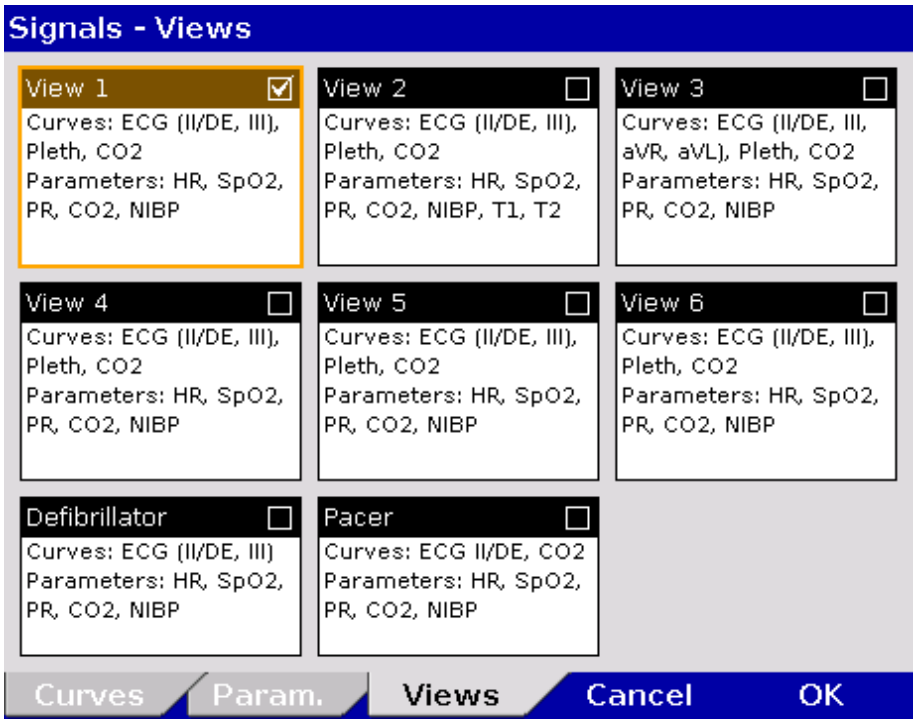

Fig. 7-6 Selecting pre-set views

2. Select the required configured view with the jog dial and press to confirm.
3. To confirm the settings and close the configuration dialogue, press the softkey [OK].
   To retain the previous settings and close the configuration dialogue, press the softkey [Cancel].

Note The views for the defibrillator- and pacer mode can only be adjusted if the user switches first to defibrillator- or pacer mode.

Note Configured views can only be permanently saved in the system settings by the person responsible for the device (user authorisation required) (see chapter 7.4.7 Basic Configuration of the Views (Persons Responsible for the Device), page 184).

7.1.3 Printer settings

Curves

1. Select in the main menu "Printer" ► "Curves".The configuration dialogue opens.

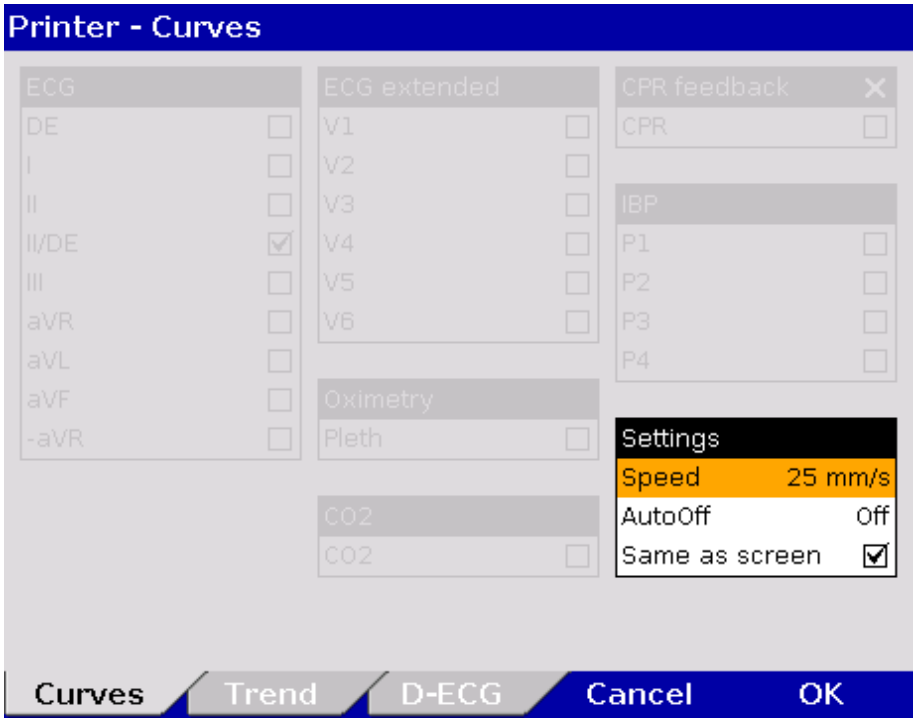

Fig. 7-7 Printer setting "Same as screen"

2. If in the group “Settings” the checkbox “Same as screen” is ticked, the curves currently displayed on the screen are printed. The remaining areas of the configuration dialogue are greyed out (see Fig. 7-7).

3. Deactivate the checkbox “Same as screen” to enable selection of ECG leads, Pleth-, CO_2-, IBP- or CPR curves.
4. Select required ECG leads and curves.

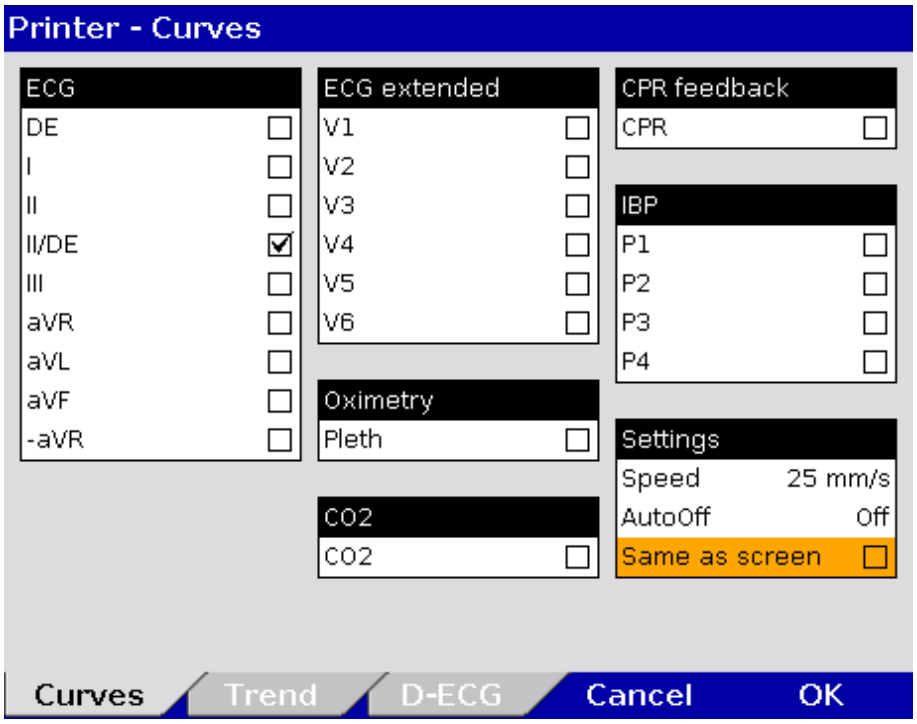

Fig. 7-8 Selecting printer curves

Note In real-time printing, up to 6 curves can be printed simultaneously one below the other.

Every real-time printout has the designation “`REALTIME PRINTOUT`” on the first page.

5. In the group "Settings", in the field “Speed” select the sweep speed and the time interval after which the printer should stop printing automatically (see Table 7-3 for the values).

Field	Setting	Values	Increments
Settings	Speed	6.25 mm/s to 50 mm/s	6.25/12.5/25/50 mm/s
	AutoOff	Off, 10 to 300 s	10 s
	Same as screen	Enabled, disabled	-

Table 7-3 Values for printer settings

Printer settings Trends and Protocol

1. Select in the main menu "Printer" ► "Trend". The configuration dialogue opens.

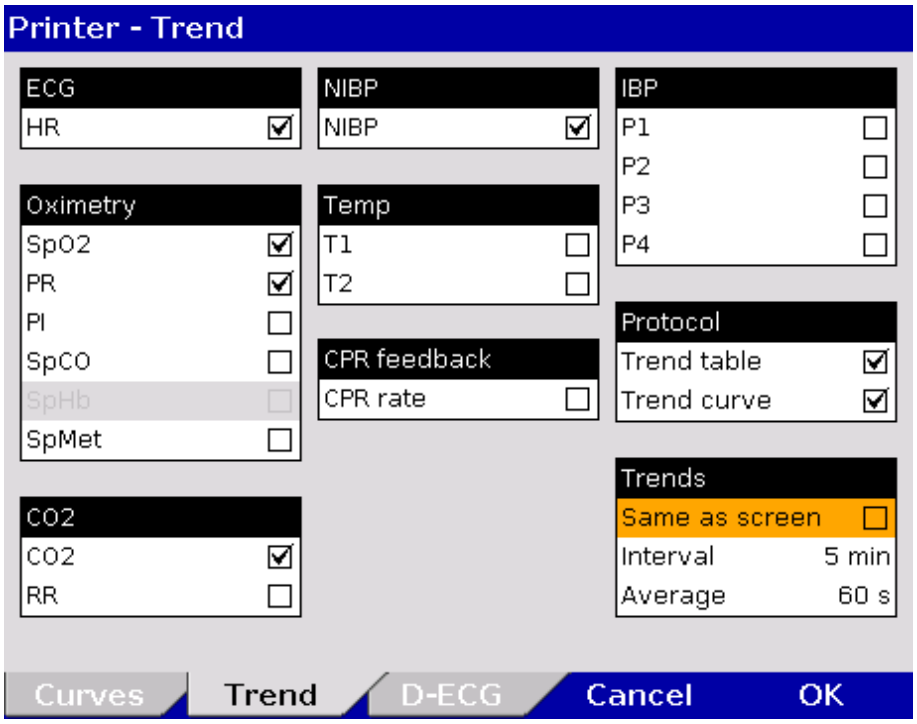

Fig. 7-9 Printer settings Trend and Protocol

2. To obtain in the protocol a chronological list of minute mean values of vital parameters in table form, tick in the group “Protocol” the checkbox “Trend table” .
3. If the protocol should contain the trend curves of the vital parameters, tick the checkbox “Trend curve” in the group “Protocol”.
4. If in the group “Trends” the checkbox “Same as screen” is ticked, the vital parameters currently displayed on the screen are printed in the protocol. If this checkbox is not ticked, up to 13 parameters included in the trend table can be selected manually.
5. Use the field “Interval” in the group "Trends" to select the intervals at which the minute mean values are logged.
6. Use the field “Average” in the group "Trends" to set the averaging interval. The values are collected and averaged over the period of time configured here (arithmetic mean value).

Group	Setting	Values	Increments
Protocol	Trend table	Enabled, disabled	-
	Trend curve	Enabled, disabled	-
Trends	Same as screen	Enabled, disabled	-
	Interval	Interval 1 min to 60 min	1, 5 and 30 min
	Average	10 s to 60 s	5, 15 and 30 s

Table 7-4 Values for trend settings

7. To confirm the settings and close the configuration dialogue, press the softkey [OK]. To retain the previous settings and close the configuration dialogue, press the softkey [Cancel].

Printing individual trend pages

To enable printing of the trend values as a single page:

1. Select in the main menu "Printer" ► "Trend page".

For the trend the minute mean values of the parameters are saved. One minute mean value is calculated from all measured values within one minute as the arithmetic average.

Trend symbols in the protocol

If in the trend table on the protocol printout one parameter value bears an exclamation mark (e. g. for HR: 60!), this indicates that within this interval an alarm limit was exceeded or the value fell below the alarm limit.

If at one timestamp one parameter value shows a question mark (e. g. for HR: ?), this indicates that within the last minute no mean value could be saved due to technical reasons. This is the case, for example, if at the time of printout the monitoring unit is out of range (radio connection) of the patient box.

If at one timestamp one parameter value shows two dashes (e. g. for NIBP: --), this indicates that within the last minute no mean value could be detected and saved.

Note The printout of the trendpage contains the trend value of the last minute before the **Print** key was pressed. The recorded trend values may therefore originate from an earlier point in time.

Note If the markings signalling the end of the paper roll become visible, a paper jam is possible with a selected printer speed of 6.25 mm/s.

To adjust the settings for the D-ECG printout, proceed as follows:

Printing the D-ECG

1. Select in the main menu "Printer" ► "D-ECG". The configuration dialogue opens.

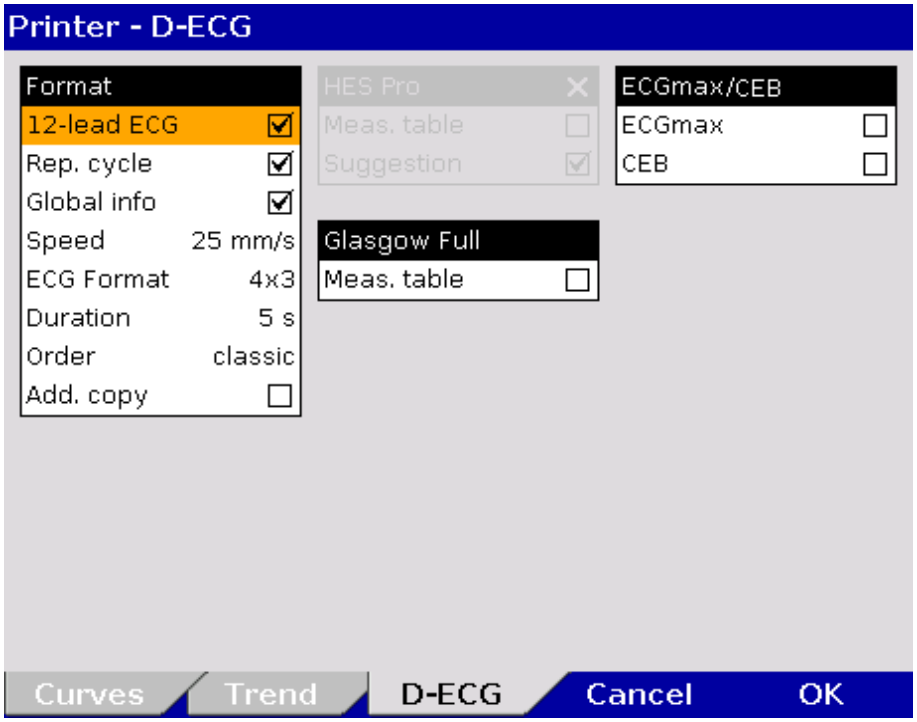

Fig. 7-10 Printer settings for D-ECG (illustration may differ)

Group	Field	Setting	Values
Format	12-lead ECG	12 lead ECG printout	Enabled, disabled
	Rep. cycle	Printout of the representative cycle	Enabled, disabled
	Global info	Printout of diagnosis	Enabled, disabled
	Speed	Sweep speed of the D-ECG	25 mm/s, 50 mm/s
	ECG Format	Printout format	2x6, 4x3

Group	Field	Setting	Values
	Duration	Duration/length of the printout of one ECG block	3 to 10 s
	Order	Classic placement of ECG curves or according to Cabrera	Classic, Cabrera
	Add. copy	Prints out another copy	Enabled, disabled
HES® Pro	Meas. table (Option)	Adds the measuring table of interpretation to the printout	Enabled, disabled
	Suggestion (Option)	Adds a therapy suggestion to the printout	Enabled, disabled
Glasgow Full Scale	Meas. table	Adds the measuring table of interpretation to the printout	Enabled, disabled
ECGmax/CEB	ECGmax	22 lead ECG printout	Enabled, disabled
	CEB	Printout of the CEB	Enabled, disabled

Table 7-5 Printer settings for D-ECG

2. To have the 12-lead ECG included in the protocol, tick in the group "Format" the checkbox "12-lead ECG".
3. To display the representative cycle, tick in the group "Format" the checkbox "Rep. cycle".
4. Select the D-ECG speed on the printout.
5. Select the printout format:
   - 2 x 6: Two blocks of 6 ECG leads each are printed.
   - 4 x 3: Four blocks of three ECG leads each are printed.
6. Select the duration of the ECG block.
7. Select the order of the ECG curves on the D-ECG printout:
   - Classic: Leads I, II, III, aVR, aVL, aVF.
   - Cabrera: Leads aVL, I, -aVR, II, aVF, III.
8. To print out an additional copy of the D-ECG, tick the checkbox "Add. copy".
9. Optional: Add the measuring table of interpretation to the printout (**HES® Pro** and **Glasgow Full Scale**).
10. Optional: Add the therapy suggestion to the printout (only **HES® Pro**).
11. To confirm the settings and close the configuration dialogue, press the softkey [OK].
    To retain the previous settings and close the configuration dialogue, press the softkey [Cancel].

CPR summary (printout)

After deployment of the CPR feedback sensor the corpuls3 calculates and stores a statistical evaluation from the collected data. If the user OPERATOR has enabled this option (see chapter 7.4.12 Configuration of the Metronome and CPR feedback (Persons Responsible for the Device), page 190), the CPR summary can be printed out on the corpuls3 via the main menu or the mission browser and so allows a direct mission debriefing for users. The printout contains various quality parameters and graphical summaries of the respective resuscitation mission.

Adjusting the printer intensity

As of software version 3.0.5 the user DEFAULT can adjust the intensity of the printer. This may e.g. be necessary after inserting a new role of printer paper, if the letters are printed too thin or too fat and are illegible.

1. Select in the main menu "Printer" ► "Settings". The configuration dialogue opens.
2. Select in the group "Printer" the field "Intensity" with the jog dial and choose a value between 0 and 20.

Note By default, the value 10 is set.

Field	Values
Intensity	0 -20

Table 7-6 Adjusting the printer intensity

7.1.4 Configuration of the Fax Transmission (User DEFAULT)

Settings for Fax Transmission (option)

The following settings can be configured by the user DEFAULT for transmitting a fax:

- Enabling and disabling of the GSM connection (aircraft mode)
- Selection of the sweep speed for the representation of the D-ECG on the fax machine.

7.2 Configuration of the Monitoring Functions

The settings of the following monitoring functions can be configured:

- ECG
- SpO_2
- SpMet® (available only with with Masimo rainbow SET® Technology)
- SpCO® (available only with with Masimo rainbow SET® Technology)
- SpHb® (available only with with Masimo rainbow SET® Technology)
- PR
- Pi
- CO_2
- NIBP
- IBP
- CPR feedback

7.2.1 ECG Monitoring

The following settings can be configured:

- ECG Display
- Dynamic QRS-/Pulse tone (option)
- 20 Hz filter

General settings

1. Select in the main menu "ECG" ► "Settings". The configuration dialogue opens.

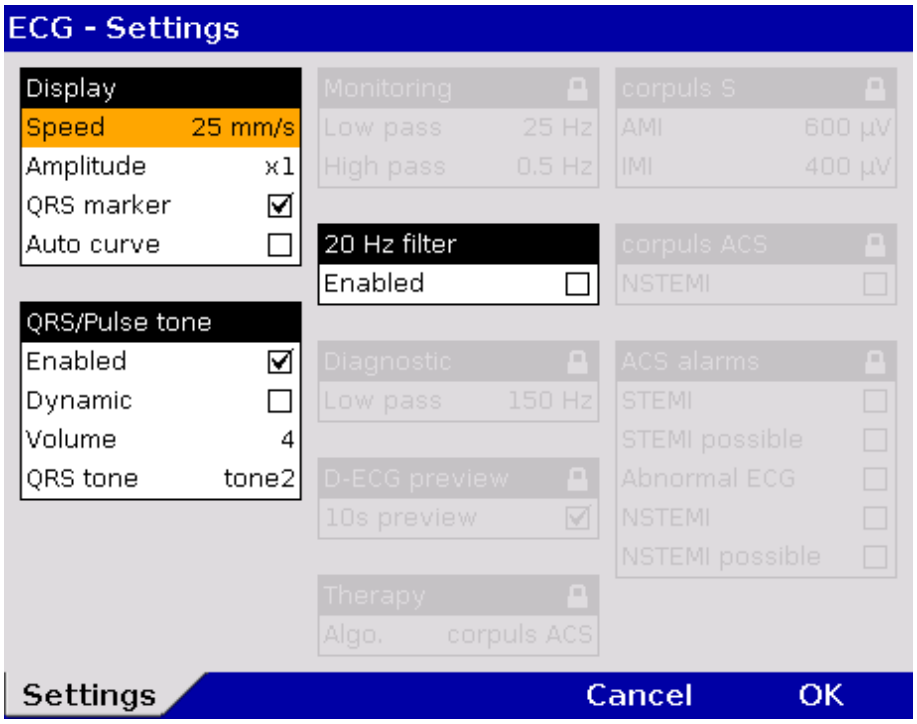

Fig. 7-11 ECG settings

2. Select the settings. Table 7-7 shows the possible values.

Field	Setting	Values
Screen	Speed	12.5 mm/s, 25 mm/s, 50 mm/s
	Amplitude	Auto; x 0.25; x 0.5; x 1; x 2
	QRS marker	Enabled, disabled
	Auto curve	Enabled, disabled
QRS/Pulse tone	Enabled	Enabled, disabled
	Dynamic	Enabled, disabled
	Volume	3 to 10
	QRS tone	Tone 1 to tone 4
20 Hz filter	Enabled	Enabled, disabled

Table 7-7 Values for ECG setting

Auto curve

After connecting the 4-pole ECG monitoring cable (to patient and patient box) the ECG curve of lead DE appears automatically on the screen if a valid ECG is detected.

Dynamic QRS-/Pulse Tone

If the pitch of the pulse tone is supposed to indicate a change in oxygen saturation (SpO2 value), tick the checkbox in the "Dynamic" field. With this option, a decrease of the oxygen saturation can be detected early on acoustically. Deselecting the QRS tone disables the dynamic pulse tone as well (see chapter 7.2.2 Oximetry, page 167).

Note

The dynamic QRS-/Pulse tone is only available, if the device is equipped with the oximetry (SpO_2) option. If not, the field is greyed out.

20 Hz filter

By means of the 20 Hz filter, muscle contractions of the patient can be filtered out of the ECG. In monitoring mode, the 20 Hz filter can be enabled or disabled via the curve context menu.

Warning

Risk of wrong diagnosis

The use of the 20 Hz filter in monitoring causes distortions in the ECG that can be misinterpreted. A diagnosis should only be made on the basis of a diagnostic ECG.

Note

To increase diagnostic safety, the message "**ECG FILTER ACTIVE - INTERPRETABILITY MAY BE AFFECTED**" is printed for the user on the printout if the ECG is changed by filter settings and thus the interpretability is limited.

7.2.2 Oximetry

Settings

1. Select in the main menu "Oximetry" ► "Settings". The configuration dialogue opens.

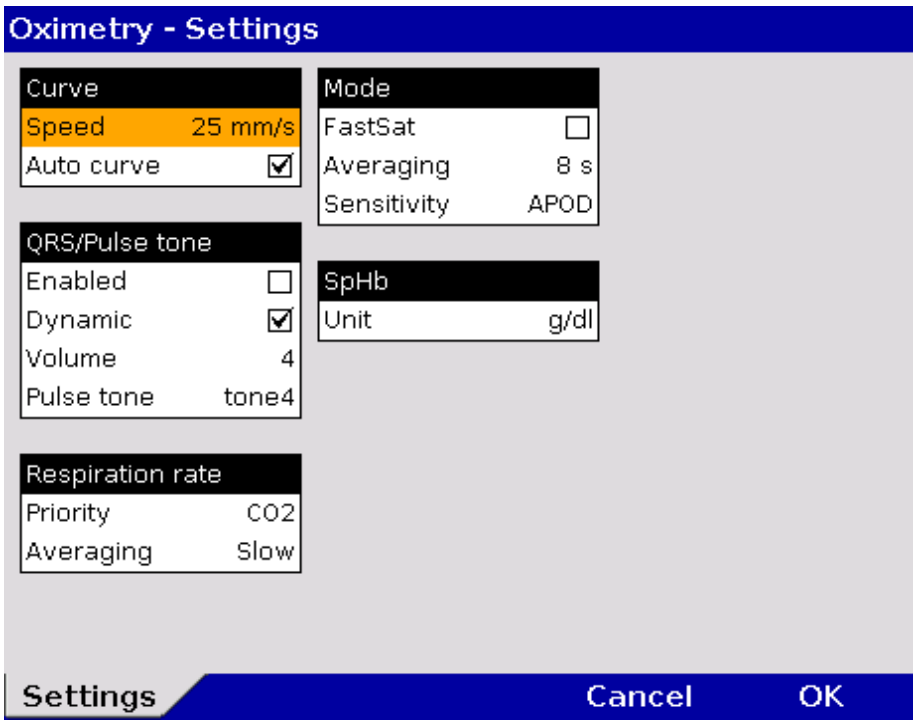

Fig. 7-12 Settings for oximetry monitoring

2. Select the settings. Table 7-8 shows the possible values.

Field	Setting	Values	Increments
Curve	Sweep speed	12.5 mm/s, 25 mm/s, 50 mm/s	–
	Auto curve	Enabled, disabled	–
QRS/Pulse tone	Enabled	Enabled, disabled	-
	Dynamic	Enabled, disabled	-
	Volume	3 to 10	1
	Pulse tone	1 to 4	
Respiration rate	Priority	CO2, Oximetry	-
	Averaging	None, Fast, Med., Slow, Trend.	-

Field	Setting	Values	Increments
Mode	FastSat®	Enabled, disabled	–
	Averaging	2-4 s, 4-6 s, 8 s to 16 s	– 2
	Sensitivity	Max., Norm, APOD®	–
SpHb	Unit	g/dl, mmol/l	–

Table 7-8 Values for oximetry Monitoring

3. To confirm the settings and close the configuration dialogue, press the softkey [OK].
   To retain the previous settings and close the configuration dialogue, press the softkey [Cancel].

Auto curve If the check box "Auto Curve" is ticked, the pleth curve will be displayed on the screen as soon as valid oximetry values are measured.

Dynamic Pulse Tone If the pitch of the pulse tone is supposed to indicate a change in oxygen saturation (SpO2 value), tick the checkbox in the "Dynamic" field. With this option, a decrease of the oxygen saturation can be detected early on acoustically. If a 4 pole ECG monitoring cable is connected additionally, the pitch of the QRS-/pulse tone indicates the level of the oxygen saturation.

Priority of the RR source The respiration rate can be measured by capnometry or by oximetry. If both options are available, priority can be given to the signal from one source.

Note If one signal source for respiration rate is set as priority, but there currently is no signal, the device automatically displays the available signal source. As soon as the prioritised signal source is available, that signal is displayed.

Note By default, respiration rate via CO2 is prioritised; if the respiration rate over pleth should be displayed, the priority can be changed via the parameter context menu or in the capnometry- or oximetry settings.

Note Some settings are only available with the Masimo rainbow SET® Technology.

Note See chapter 6.6.4 Performing Oximetry Measurement, page 133 for information on the possible settings.

7.2.3 CO2

Setting

Select in the main menu "CO2" ▶ "Settings". The configuration dialogue opens.

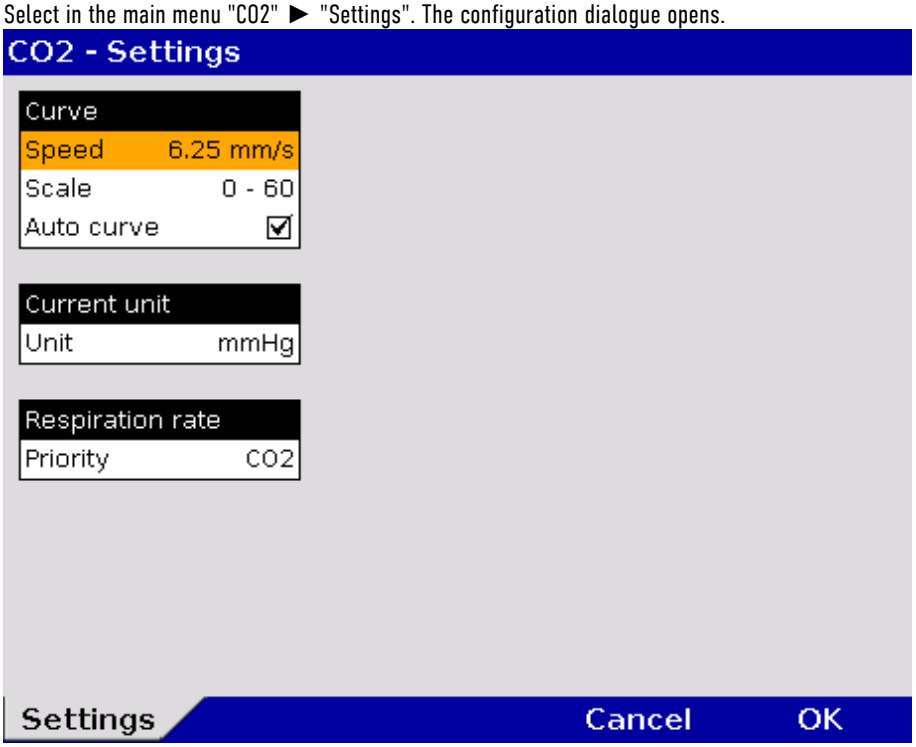

Fig. 7-13 Settings for CO_2 monitoring

1. Select the settings. Table 7-9 shows the possible values.
2. To confirm the settings and close the configuration dialogue, press the softkey [OK]. To retain the previous settings and close the configuration dialogue, press the softkey [Cancel].

Field	Setting	Values
Curve	Sweep speed	3.13 mm/s, 6.25 mm/s, 12.5 mm/s, 25 mm/s
	Scaling	0-60 mmHg, 0-80 mmHg, 0-100 mmHg 0-8.0 kPa, 0-10.7 kPa, 0-13.3 kPa
	Auto curve	Enabled, disabled
Current unit	Unit	mmHg, kPa
Respiration rate	Priority	CO2, Oximetry

Table 7-9 CO_2 monitoring values

Auto curve

If the check box "Auto curve" is ticked, the CO_2 curve will be displayed on the screen as soon as valid CO_2 values are measured.

Scaling

The corpuls3 allows to adjust the amplitude of the etCO2 curve to 60 mmHg, 80 mmHg or 100 mmHg. This ensures that even with increased $etCO_2$ values the capnogram is displayed completely. The scaling can be changed directly in the curve context menu. If the curves appear to be cut off at the top, check the scaling and set to an appropriate option.

Priority of the RR source

The respiration rate can be measured by capnometry or by oximetry. If both options are available, priority can be given to the signal from one source.

Note

If one signal source for respiration rate is set as priority, but there currently is no signal, the device automatically displays the available signal source. As soon as the prioritised signal source is available, that signal is displayed.

Note

By default, respiration rate via CO2 is prioritised; if the respiration rate over pleth should be displayed, the priority can be changed via the parameter context menu or in the capnometry- or oximetry settings.

7.2.4 IBP

Setting

1. Select in the main menu "IBP" ► "Settings". The configuration dialogue opens.

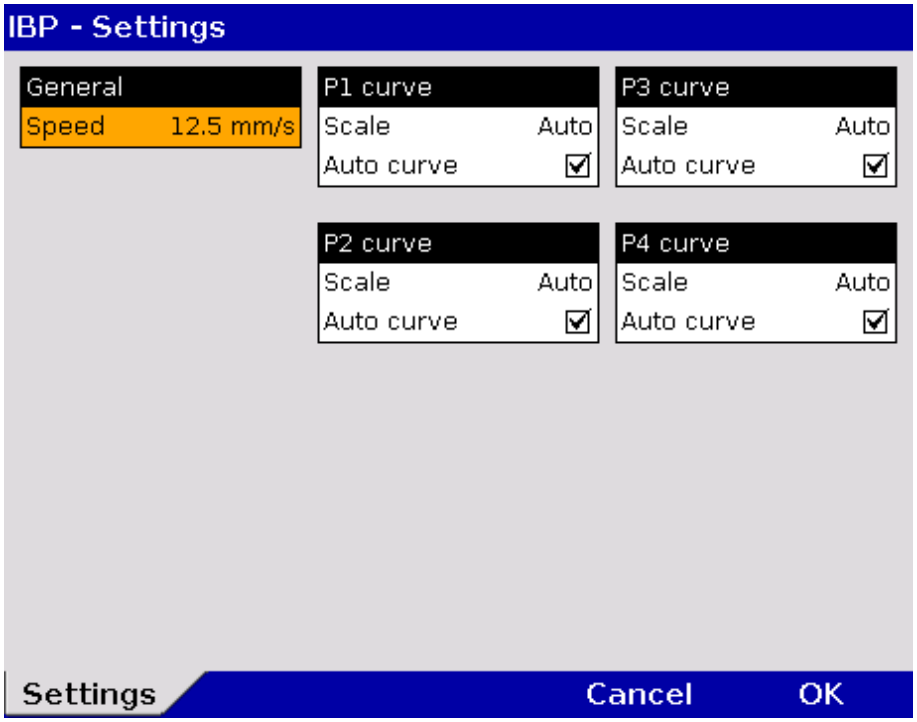

Fig. 7-14 Settings for IBP monitoring

2. Select the settings. Table 7-10 shows the possible values.

Field	Setting	Values
General	Speed	12.5 mm/s, 25 mm/s, 50 mm/s
P curve	Scaling	Auto; 0 to 30; 0 to 60; 0 to 120; 0 to 180; 0 to 300 -10 to 10; -20 to 20; -30 to 30; -40 to 40; -50 to 50
	Auto curve	Enabled, disabled

Table 7-10 Values for IBP monitoring

Scaling

Depending on the measurement site (e. g. arterial, central venous, intracranial) the printing area must be scaled accordingly.

Auto curve

If the check box "Auto Curve" is ticked, the IBP curve will be displayed on the screen as soon as the IBP sensor is connected to the patient box and the corresponding measuring channel is calibrated.

Note

The function "Auto curve" does not work for negative pressure values.

Calibration

1. Select in the main menu "IBP" ► "Calibr. P1" of the respective pressure channel.
2. Calibration is performed automatically. In case the calibration cannot be performed correctly, the alarm "IBP calibration error" appears.

Note

The IBP channel can be calibrated directly in the context menu of the pertaining parameter field. After calibration of the channel, the IBP curve is displayed automatically (Auto curve).

7.2.5 CPR feedback

Setting

1. Select in the main menu "Defib" ► "CPR". The configuration dialogue opens.

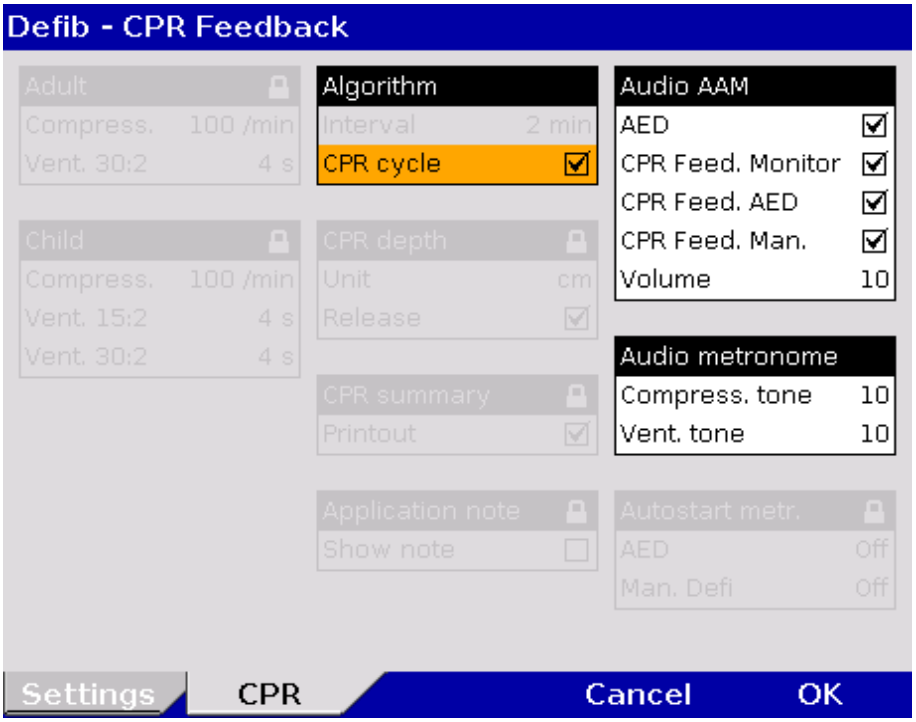

Fig. 7-15 Settings for CPR feedback

2. Select the settings. Table 7-11 shows the possible values.

Field	Setting	Values
Algorithm	CPR cycle	Enabled, disabled
CPR depth	Unit	Selection of the length unit
	Release	The spoken message **`Fully release`** can be disabled
Audio AAM	AED	Enabled, disabled
	Volume	3 – 10
Audio metronome	Compress. tone	3 – 10
	Vent. tone	Off; 3 – 10

Table 7-11 Values for CPR feedback

CPR cycle The user can deactivate the display of the pie chart "CPR cycle" (see chapter , page).

Unit The unit of the reference range for the compression depth can be switched from centimetres to inches.

Message "`Fully release`" The user can deactivate the spoken message "Fully release" (see chapter 7.4.12 Configuration of the Metronome and CPR feedback (Persons Responsible for the Device), page 190).

Audio AAM In AED mode the spoken messages (AAM – Acoustic Advisory Mode) can be enabled or disabled and the volume of the messages can be configured.

Audio metronome The volume of the compression tone and ventilation tone can be adjusted as required.

For further settings of the metronome and CPR feedback see chapter 7.4.12 Configuration of the Metronome and CPR feedback (Persons Responsible for the Device), page 190.

7.3 Alarm Configuration

7.3.1 Configuring Alarm Settings

1. Select in the main menu "Alarms" ► "Settings". The configuration dialogue opens.

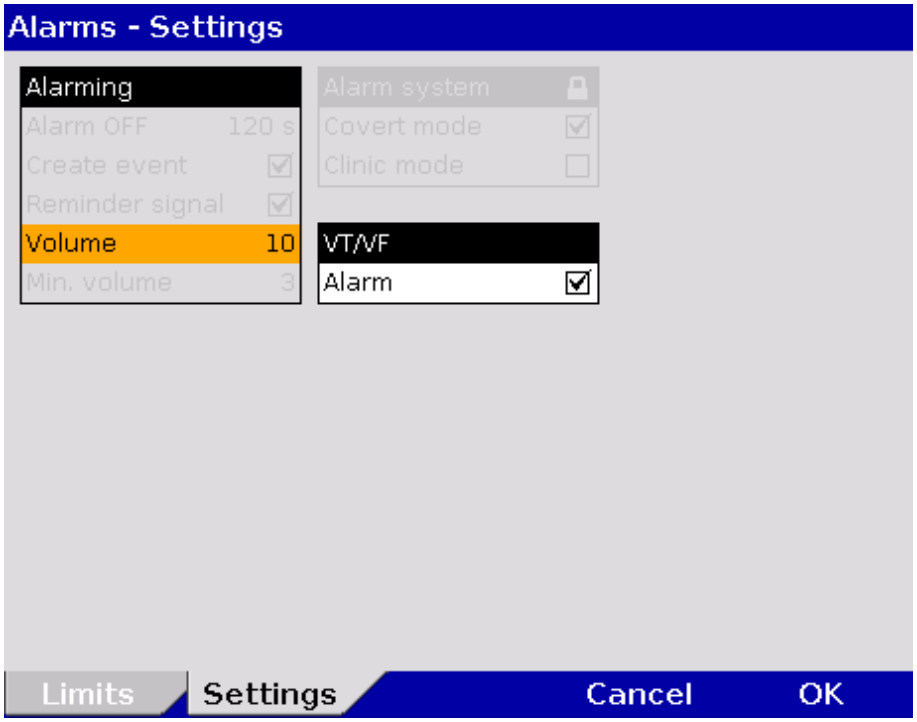

Fig. 7-16 Alarm settings

2. Select the settings.

Note The user cannot set the volume lower than the minimal volume defined by the user OPERATOR.

The alarm for the occurrence of a ventricular tachycardia (VT) or a ventricular fibrillation (VF) can be disabled.

Group	Setting	Values
Alarming	Volume	3 - 10
VT/VF	Alarm	Enabled, disabled

Table 7-12 Settings for the VT/VF alarm

3. To confirm the settings and close the configuration dialogue, press the softkey [OK]. To retain the previous settings and close the configuration dialogue, press the softkey [Cancel].

7.3.2 Alarm Limit Settings

If the value of a vital parameter falls below or exceeds the limit values, an alarm is triggered if the following conditions are met:

- Device is not in defibrillation mode.
- Alarm mode is set to "Alarm ON":
  - Select the parameter field of the vital parameter and open the parameter context menu.
  Select “Alarm ON” in the parameter context menu.

Note If for one parameter the alarm has been disabled by selecting "Alarm OFF" and the parameter field is no longer displayed, the alarm will automatically be re-enabled.

The alarm limits for vital parameters can be adjusted manually by the user or automatically by the device:

1. Automatically in the parameter context menu with the menu item "Autolimits";
2. Manually or automatically in the main menu.

7.3.3 Setting Alarm Limits for Monitoring Functions Manually

1. Select in the main menu "Alarms" ► "Limits". The configuration dialogue opens.

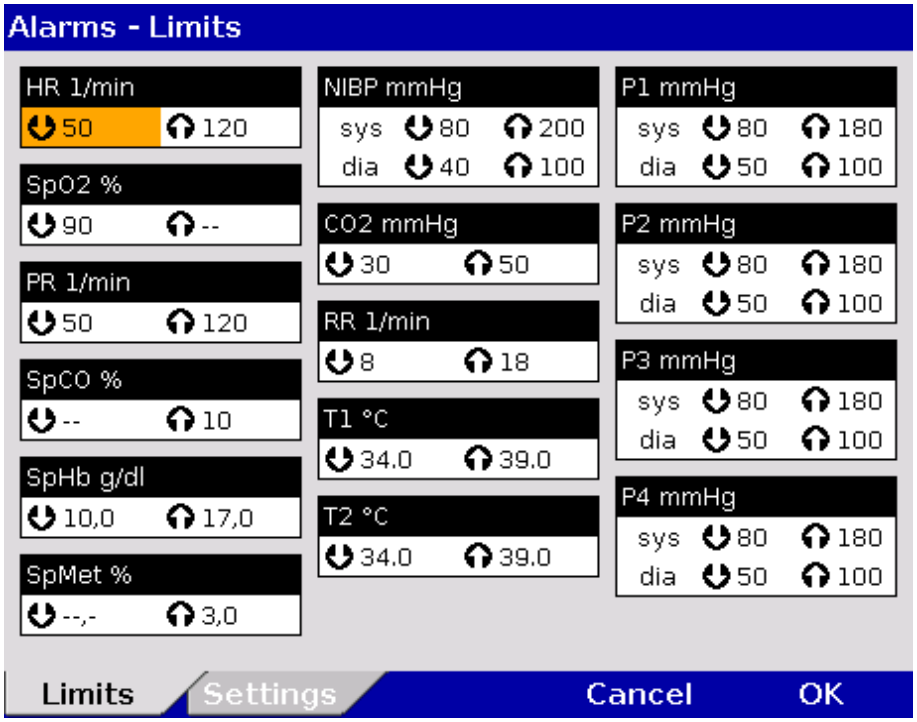

Fig. 7-17 Alarm limits

2. Select the alarm limits of the corresponding parameter.
3. Select and confirm the alarm limits.

Note The actually available value range indicated in Table 7-13 depends on the selected upper and lower limit values, as the upper and lower limits may not overlap. Setting extreme alarm limits may render the alarm system useless.

Function	Lower limit	Upper limit	Increments
HR 1/min	--; 25 to 150	--; 70 to 250	5
SpO_2 %	--; 65 to 98	--; 90 to 99	1
PR 1/min	--; 25 to 100	--; 70 to 235	5
SpCO® %	--; 0 to 99	--; 1 to 99	1
SpHb® g/dl	--; 5.0 to 12.0	--; 10 to 22	0.1
SpHb® mmol/l	--; 3.1 to 7.4	--; 6.2 to 13.7	0.1
SpMet® %	--; 0.1 to 99.5	--; 1 to 99.5	0.1 (0-2) 0.5 (2-100)
RRp® 1/min	--; 5 to 40	--; 15 to 80	1

Function	Lower limit	Upper limit	Increments
NIBP mmHg sys	--; 50 to 150	--; 100 to 250	5
NIBP mmHg dia	--; 10 to 80	--; 50 to 120	5
CO_2 mmHg	--; 10 to 80	--; 15 to 100	1
CO_2 kPa	--; 1.3 to 10.7	--; 2.0 to 13.3	0.1
RR 1/min	--; 5 to 40	--; 15 to 80	1
T1 °C	--,- ; 30 to 40 *)	--,- ; 35 to 42 *)	0.1
T2 °C	--,- ; 30 to 40	--,- ; 35 to 42	0.1
P1 to P4 mmHg sys	--; -50 to 200	--; 0 to 300	1 (-50 to 30) 5 (30 to 300)
P1 to P4 mmHg dia	--; -50 to 200	--; 0 to 300	

Table 7-13 Values for alarm limits

*) For temperature measurements on the body surface, the limit values must be adjusted accordingly.

4. To confirm the settings and close the configuration dialogue, press the softkey [OK]. To retain the previous settings and close the configuration dialogue, press the softkey [Cancel].

7.3.4 Setting the Alarm Limits for Monitoring Functions Automatically

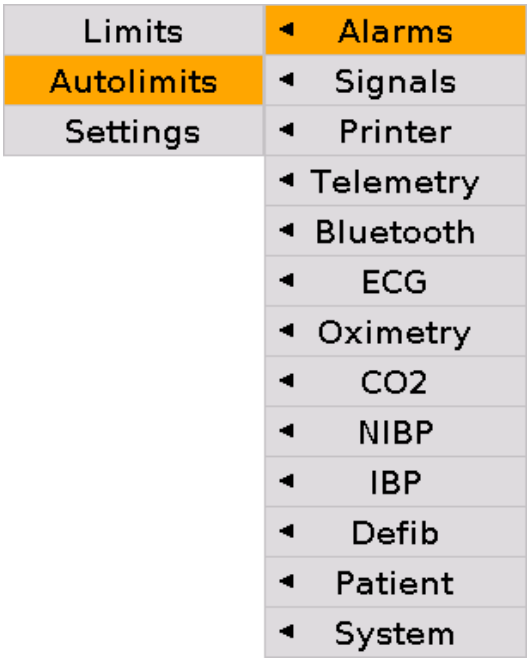

Fig. 7-18 Setting automatic alarm limits

1. Select in the main menu "Alarms" ► "Autolimits".
   The corpuls3 sets alarm limits automatically depending on the current patient readings. A configuration dialogue with all the automatically set alarm limits appears (see page 173 Fig. 7-17).
2. To confirm the settings and close the configuration dialogue, press the softkey [OK]. To retain the previous settings and close the configuration dialogue, press the softkey [Cancel].

If necessary, adapt individual alarm limits manually.

7.4 Advanced settings (for persons responsible for the device)

7.4.1 Authorisation for Persons Responsible for the Device

Authorisation

The user OPERATOR, in contrast to the user DEFAULT, has a higher authorisation level to perform configurations. The different user levels are protected by access codes.

1. Select in the main menu "System" ► "Login". The following prompt appears:



Fig. 7-19 Code prompt

2. Enter the 4-digit access code for the user "OPERATOR" with the softkeys. To enter the figures 5 to 9 press the softkey [➡].
   The message "`User OPERATOR logged in successfully`" appears.

Note The corpuls3 always starts at the user level DEFAULT.

Note The 4-digit access code can be chosen by the users themselves (see chapter 7.4.2 General System Settings (Person responsible for the device), page 175).

The factory setting on delivery is:

- 2-2-2-2 for the person responsible for the device (OPERATOR);
- 1-1-1-1 for user DEFAULT.

Note It is recommended to change the access codes for the person responsible for the device (OPERATOR) and – if appropriate – for the restricted access to manual defibrillation (MAN. DEFIB.) and pacer (PACER) on commissioning the device, in order to prevent misuse.



Caution

Risk of inadequate therapy

The corpuls3 may only be used on patients if the user DEFAULT is logged in. In the higher user level for user OPERATOR, the application on patients is not allowed.

7.4.2 General System Settings (Person responsible for the device)

General system settings

Persons responsible for the device can adjust the following settings in addition to those described in chapter 7.1.1 General System Settings (User DEFAULT), page 154:

- Language
- Configuration
- Access codes
- Authorisation for "MAN. DEFIB." and "PACER"
- Mains filter
- CF card

1. Select in the main menu "System" ► "Settings". The configuration dialogue opens.

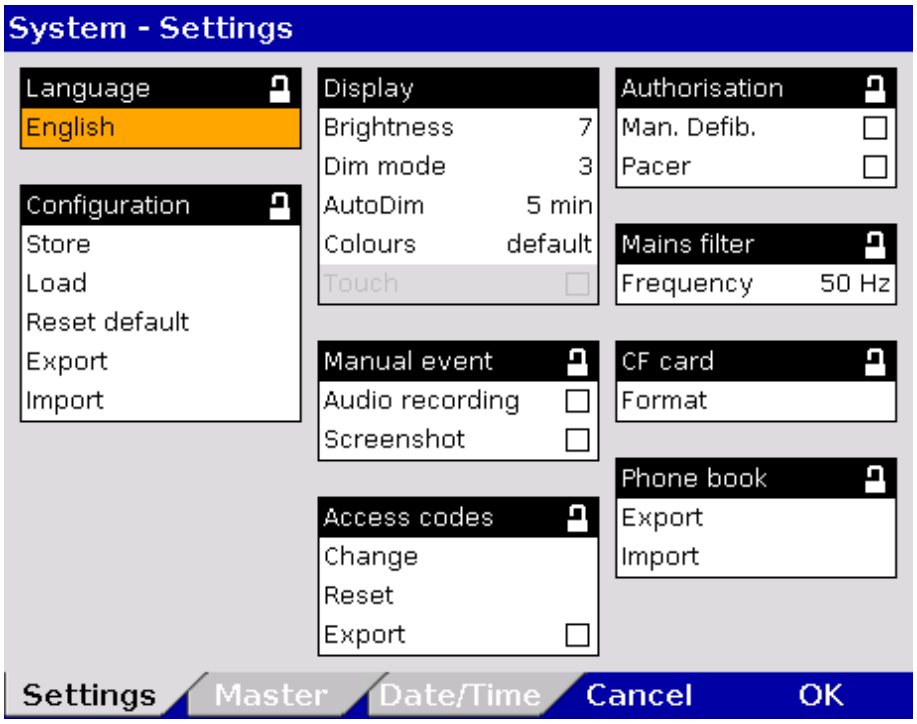

Fig. 7-20 System settings (persons responsible for the device)

2. Select the settings. Table 7-14 shows the possible values.

Field	Setting	Values	Increments
Language	German	German English, etc.	-
Time/Date	Set time	Hours:minutes	0-23:00-59
	Set date	DD.MM.YY (from 2000)	-
	UTC offset	Hours:minutes	-12 - +13:00, 15, 30, 45
	Autom. DST	Enabled, disabled	-
Configuration	Store	Store? Yes Store? No	-
	Load	Load? Yes Load? No	-
	Reset default	Reset default? Yes Reset default? No	-
	Export	Export? Yes Export? No	-
	Import	Import? Yes Import? No	-
Display	Brightness	0 (dark) to 10	1
	Dim mode	0 (dark) to 10	1
	AutoDim	Off, 1 to 15 min	1
	Colours	default/night/inverted	–
Manual event	Audio recording	Enabled, disabled	-
	Screenshot	Enabled, disabled	-

Field	Setting	Values	Increments
Access codes	Change	DEFAULT OPERATOR MAN. DEFIB. PACER	4 digits, 0-9, Increments of 1
	Reset default	DEFAULT OPERATOR MAN. DEFIB. PACER	-
	Export	Enabled, disabled	-
Authorisation	Man. Defib.	Enabled, disabled	-
	Pacer	Enabled, disabled	-
Mains filter	Frequency	50 Hz, 60 Hz	-
CF card	Format	Format? Yes Format? No	-
Phone book	Export	Export? Yes Export? No	-
	Import	Import? Yes Import? No	-

Table 7-14 Values for system settings (persons responsible for the device)

3. To save, load or reset the adjusted settings, select the required option with the jog dial and press to confirm.

Saving the configuration

All the settings configured, except date and time, must be saved if they are to be available the next time the corpuls3 is switched on.

Loading configuration

The "Load" function allows a reset to the last version saved while device is running. So the device does not have to be switched off to undo temporary changes to the settings.

Resetting the configuration

With the "Reset default" function, the corpuls3 is reset to the factory settings (see also Appendix D Reset to factory settings, page 291).

Exporting the configuration

The function "Export" allows the export of the configuration settings that were saved last onto the CF card. So, configurations once defined can be transferred to another corpuls3. The GSM PIN, the BT PIN and some master data (Transport type, Radio ID, Location, Callback phone, Medical team, Device ID) (see also chapter 8.4 Master data, page 197) are not exported. In case of a software update all saved configurations remain unchanged.

Importing the configuration

The configuration (telemetry settings, APN password, W/LAN network settings, IP addresses, GSM/GPRS data), the internal phonebook (corpuls.mission **LIVE**, e-mail, fax, BT addresses), access codes for the users "DEFAULT", "OPERATOR", "MAN. DEFIB." and "PACER" as well as some master data (organisation, organisation phone) can be exported to the CF card and imported to other corpuls3 devices with the function "Import". After importing the configuration settings, the corpuls3 has to be restarted in order for the new configuration to take effect.

Audio recording and screenshots

If the audio recording option is enabled, pressing the **Event** key additionally stores a 15 second recording of the surrounding sounds (5 s before and 10 s after pressing the key). The volume of the audio recording is fixed. The audio recording appears as manual event in the protocol. Furthermore, by pressing the **Event** key with the screenshot option enabled, a picture file can be saved that shows the screen at the time of the event. The audio recording and the screenshots can be played and viewed with the software corpuls.manager **REVIEW** (see chapter 8.6 Analysis of the Data with corpuls.manager REVIEW, page 201).

Caution

Function error due to incompatible configuration

When importing a configuration, the device does not check if the configuration is compatible (e.g. newer or older SW version). Import only configurations from devices with the same software version.

Changing the access codes

The user OPERATOR can manually change the access codes for the
- user DEFAULT,
- restricted access use of the of the manual defibrillation (MAN. DEFIB.)
- restricted access use of the of the pacer (PACER) and
- for the person responsible for the device (OPERATOR).

For this purpose, a 4-digit access code has to be selected and repeated.

Note

It is recommended to change the access codes for the person responsible for the device (OPERATOR) and – if appropriate – for the restricted access to manual defibrillation (MAN. DEFIB.) and pacer (PACER) on commissioning the device.

Resetting access codes

The user OPERATOR can reset the access codes for the user DEFAULT, for restricted access to manual defibrillation (MAN. DEFIB.) and pacer (PACER) and for the user OPERATOR to the factory settings. For this purpose, a confirmation prompt must be confirmed with the softkey [OK].

If the access code for the user OPERATOR is no longer known, the authorised corpuls sales and service partner can reset the access codes to factory settings (see also Appendix D Reset to factory settings, page 291).

Formatting the CF card

The function "Format" allows the user to format the CF inserted in the device. After formatting, a reboot is recommended.

Exporting and importing the phonebook

The phonebook is part of the configuration export, but can also be exported or imported separately from one corpuls3 to another via the CF card.

7.4.3 Configuration of Manual Events (Persons Responsible for the Device)

Pre-configured events

For easier documentation of medical measures (administration of drugs, intubation etc), the user OPERATOR can pre-configure and deposit up to 14 manual events:

1. Select in the main menu "System" ► "Events". The configuration dialogue opens.

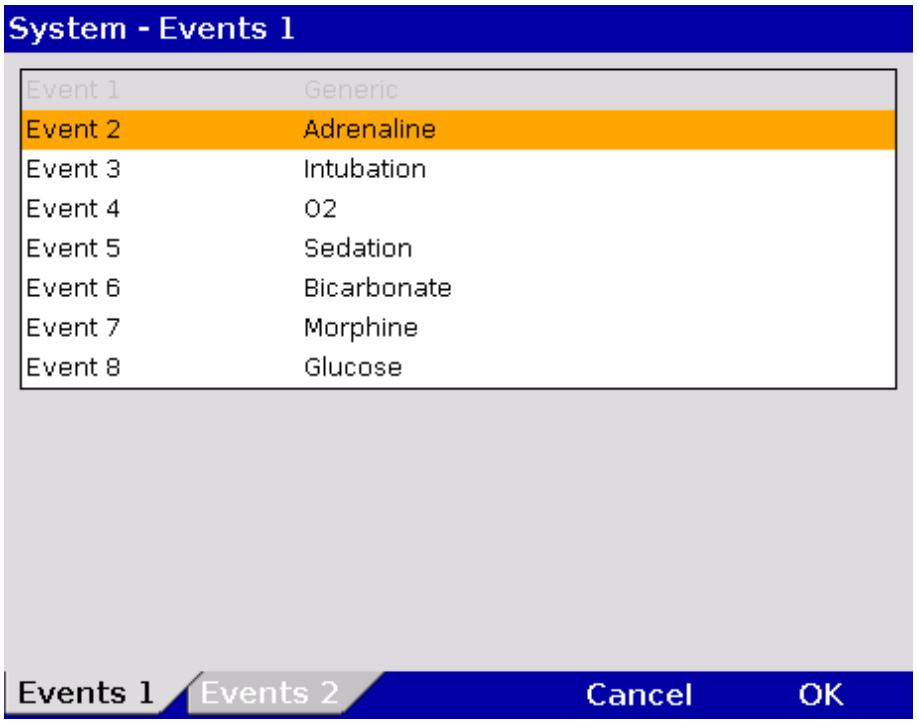

Fig. 7-21 Event configuration (persons responsible for the device)

The first and the last event are fixed as "**Generic**" and "**Cancel Last**" and therefore appear greyed out and cannot be edited.

2. Enter the name of the event with the jog dial (16 characters) and confirm by pressing the softkey [Enter].
3. Repeat to configure other events.
4. To configure Event 9 to 15, press the softkey assigned to the tab "Events 2".
5. To close the configuration dialogue, press the softkey [OK].

To add pre-configured events to the protocol for documentation, see chapter 8.2, Event key, page 196.

7.4.4 Configuration of the Defibrillation Function (Persons Responsible for the Device)

Persons responsible for the device can configure further defibrillation function settings in addition to those described in chapter 5.3.1 Information on the AED Mode, page 71 and chapter 5.4.1 Information on Manual Defibrillation and Cardioversion, page 78.

Manual defibrillation mode

The general use of manual defibrillation can be restricted by an access code. If this option is enabled, the user needs to enter the access code "MAN. DEFIB." (see chapter 7.4.2 General System Settings (Person responsible for the device), page 175), to be able to defibrillate manually.

Pacer operation

The general use of pacing can be restricted by an access code. If this option is enabled, the user needs to enter the access code "PACER" (see chapter 7.4.2 General System Settings (Person responsible for the device), page 175), to be able to use the pacer function.



Warning

Risk of delayed therapy

The access code for the manual defibrillation mode must always be known to authorised users. If not, the patient can only be defibrillated in the AED mode with the corresponding energy restrictions.

Auto Energy

When accessed for the first time, the manual defibrillation mode and the AED mode can be used with an automatically pre-set energy level. If the energy level is then changed during the mission, the new energy level remains available when the manual defibrillation mode is accessed again. Different energy levels can be pre-set for use in adults and children.

Reminder for analysis

If in the group "Reminder Man." the checkbox "Analyse" is selected, the message "**Assess heart rhythm**" appears 2 or 3 minutes (depending on the selected resuscitation protocol) after the last shock.

Manual energy selection in AED mode

In AED mode, manual energy selection can be enabled by de-selecting the checkbox "**Locked**". So the user of the corpuls3 has the same energy selection range as in manual defibrillation mode. The ECG analysis is performed with the algorithm of the AED mode.

preShock CPR

For the preShock CPR function, the number of acoustic compression signals can be configured. Additionally, the metronome can be enabled.

Audio recording

In AED and manual defibrillation mode, audio recording can be enabled. If this option is enabled, all surrounding noises are recorded while the device is in the corresponding mode. After the mission, the audio files are available on the CF card.

Autostart Analysis

In AED mode, the option "Autostart" is available which is disabled by default. If the option is enabled by the person responsible for the device, the ECG analysis starts automatically after 3 seconds warning time and the speech- and text message "**Do not touch patient - Analysing heart rhythm**".

Note

When shock paddles, shock spoons or testing equipment (Testbox, corpuls simulator, Testload) are connected, the function „Autostart Analyse“ is disabled.

Shock Protocol

If the checkbox in the group "Shock Protocol" in the defibrillator settings is selected, a protocol containing information on the patient, vital parameters, ECG-curve, selected energy, patient impedance and released energy is printed automatically after a defibrillation. This feature is enabled by default and can be disabled by the Operator.

Disconnection signal

If the corpuls3 is to be used exclusively as a compact device or in semi-modular mode (monitoring unit and defibrillator/pacer unit connected, patient box separated, see Fig. 3-3), the person responsible for the device can configure a disconnection signal. In this case, if the monitoring unit is disconnected from the defibrillator/pacer unit, after a pre-set amount of time, an acoustic signal is given (so that no module is accidentally left behind).

Note

Under certain conditions, the disconnection signal may render the verbal instructions given in AED mode unintelligible.

Charging tone

As an additional safety feature, the rising pitch of the charging tone indicates the progress of charging acoustically and serves as a warning to bystanders.

Deactivating the "Auto Sync." mode

The mode"Auto Sync." can be disabled by the user OPERATOR.

Note

If the mode "Auto Sync." has been disabled by the user OPERATOR, it is no longer available and the mode "Async" is enabled by default.

Settings

1. Select in the main menu "Defib" ► "Settings". The configuration dialogue opens.

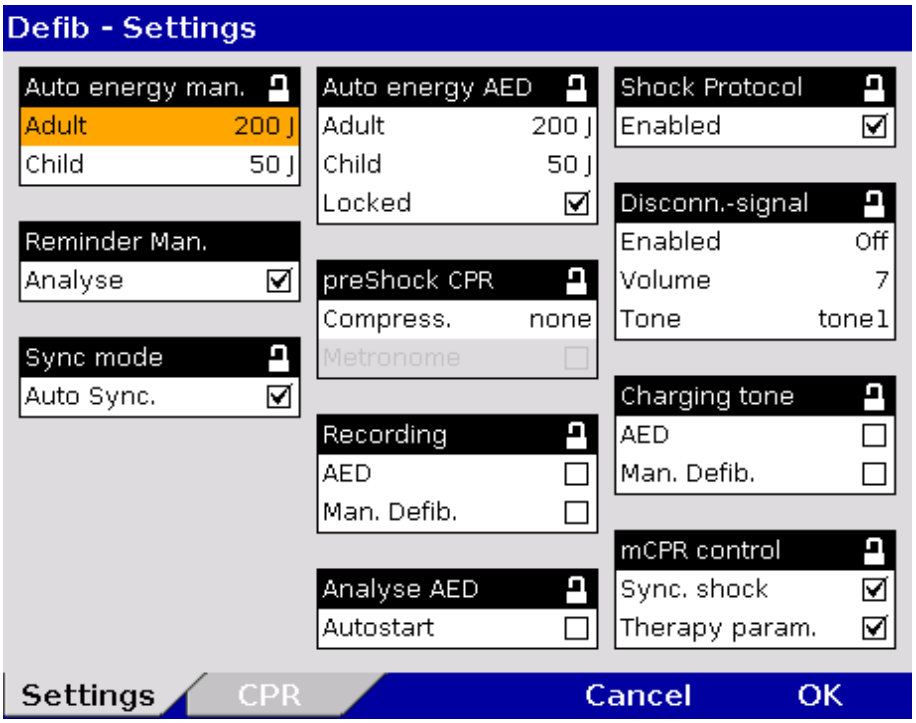

Fig. 7-22 Settings of the defibrillation function (persons responsible for the device)

2. Select the settings. Table 7-15 shows the possible values.

Group	Settings	Values
Auto energy man.	Adult	Off, 2, 3, 4, 5, 10, 15 to 200 J
	Child	Off, 2, 3, 4, 5, 10, 15 to 100 J
Reminder Man.	Analyse	Enabled, disabled
Sync mode	Auto Sync.	Enabled, disabled
Auto energy AED	Adult	2, 3, 4, 5, 10, 15 to 200 J
	Child	2, 3, 4, 5, 10, 15 to 100 J
	Locked	Enabled, disabled
preShock CPR	Compress.	None, 8, 10, 15, 20
	Metronome	Enabled, disabled

Group	Settings	Values
Recording	AED	Enabled, disabled
	Man. Defib.	Enabled, disabled
Analyse AED	Autostart	Enabled, disabled
Shock Protocol	Enabled	Enabled, disabled
Disconn.-signal	Enabled	Off, 5, 10, 30, 60 s
	Volume	3 – 10
	Tone	Tone 1 to tone 4
Charging tone	AED	Enabled, disabled
	Man. Defib.	Enabled, disabled

Table 7-15 Values for defibrillation function configuration

3. To confirm the settings and close the configuration dialogue, press the softkey [OK]. To retain the previous settings and close the configuration dialogue, press the softkey [Cancel].

7.4.5 Filter Settings (Persons Responsible for the Device)

ECG Monitoring

Persons responsible for the device can adjust further settings in addition to those described in chapter 7.2.1 ECG Monitoring, page 165.

Settings

1. Select in the main menu "ECG" ► "Settings". The configuration dialogue opens.

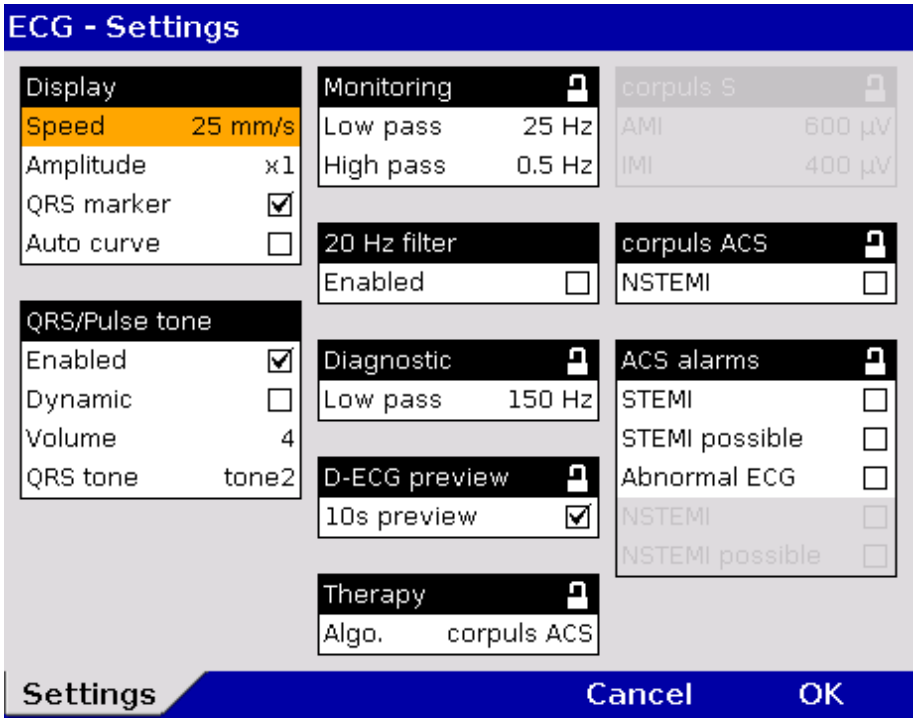

Fig. 7-23 Filter settings for ECG (persons responsible for the device)

2. Select the settings. Table 7-16 shows the possible values.

Fields	Settings	Values
Monitoring	Low pass	25 Hz; 40 Hz; 150 Hz
	High pass	0.05 Hz; 0.25 Hz; 0.5 Hz, 0.67 Hz
20 Hz filter	Enabled	Enabled, disabled
Diagnostic	Low pass	40 Hz, 150 Hz

Fields	Settings	Values
D-ECG preview	10s preview	Enabled, disabled

Table 7-16 Filter setting for monitoring ECG, diagnostic ECG (persons responsible for the device)

The frequencies for the low pass and high pass filters for ECG monitoring (Monitoring) and the low pass filter for the D-ECG (Diagnostic) can be adjusted.

Note The filter settings for the DE lead are pre-configured and fixed to 0.5 to 25 Hz.

Note The filter value of the high pass filter corresponds to the lower limit frequency of the filter.

The filter value of the low pass filter corresponds to the upper limit frequency of the filter.



Warning

Risk of inadequate therapy

The filter settings modify the representation of the ECG curves.

High pass filter The high-pass filter suppresses interference in the lower frequency range of the ECG curve. The 0.67 Hz filter is particularly effective to suppress baseline wandering.

Low pass filter The low pass filter suppresses interference in the upper frequency range of the ECG curve. This interference (artefacts) may be caused by a muscle tremor.

20 Hz filter By means of the 20 Hz filter, muscle contractions of the patient can be filtered out of the ECG. In monitoring mode, the 20 Hz filter can be enabled or disabled via the curve context menu.



Warning

Risk of wrong diagnosis

The use of the 20 Hz filter in monitoring causes distortions in the ECG that can be misinterpreted. A diagnosis should only be made on the basis of a diagnostic ECG.

Note To increase diagnostic safety, the message "`ECG FILTER ACTIVE - INTERPRETABILITY MAY BE AFFECTED`" is printed for the user on the printout if the ECG is changed by filter settings and thus the interpretability is limited.

Note For information pertaining to the configuration of ECG measurement and ECG interpretation, see chapter 7.4.9 Configuration of ECG Measurement and ECG Interpretation (Persons Responsible for the Device), page 186.

7.4.6 Alarm Configuration (Persons Responsible for the Device)

Alarm settings In addition to the settings described in chapter 7.3.1 Configuring Alarm Settings, page 172, persons responsible for the device can configure the following settings in the alarm configuration:

- Creating an event in the protocol in case of alarms
- Configuring the settings for alarm suspension (15-120 s or permanently)

Settings

1. Select in the main menu "Alarms" ► "Settings". The configuration dialogue opens.

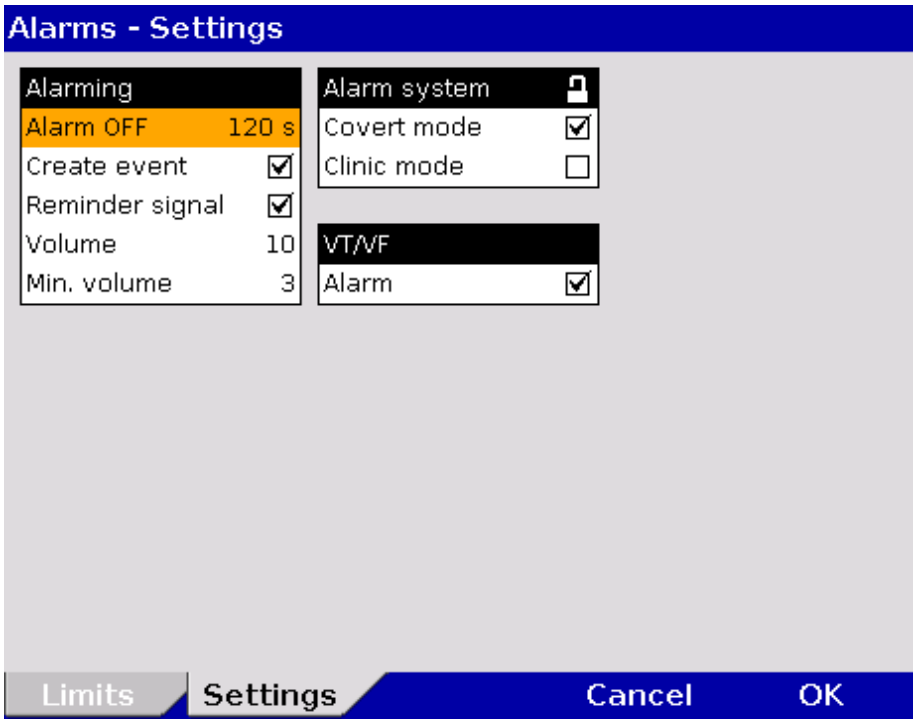

Fig. 7-24 Alarm settings (persons responsible for the device)

2. Select the settings. Table 7-17 shows the possible values.

Fields	Settings	Values
Alarming	Alarm OFF	perm.; 15 s; 30 s; 45 s; 60 s; 75 s, 90 s; 105 s; 120 s
	Create event	Enabled, disabled
	Reminder signal	Enabled, disabled
	Volume	3–10
	Min. volume	3–10
Alarm system	Covert mode	Enabled, disabled
	Clinic mode	Enabled, disabled
VT/VF	Alarm	Enabled, disabled

Table 7-17 Alarm settings (persons responsible for the device)

Create event

If this function is enabled, every alarm will be listed as an event in the protocol.

Alarm suspension



If the **Alarm** key is pressed for longer than 1 s, physiological alarms can be briefly suspended or disabled. Prerequisite is that this is configured accordingly in the settings (Alarm OFF). If the alarms are disabled, a reminder signal in form of a single tone is sounded every 60 seconds. The reminder signal can be disabled by the operator. The volume of the alarm system can be adjusted.

Note

For the alarm suspension, a maximum period of 60 seconds is recommended.

Minimal volume

The minimal volume can be configured by the user OPERATOR to prevent that alarms are not heard in loud surroundings. The user cannot set the volume lower than the minimal volume defined by the user OPERATOR.

Covert mode

If the covert mode function is enabled, all signalisations of the device via speakers (start-up tone, speech messages, ready signal, key tones, alarms etc.) as well as the lightening up of the jog dial are completely disabled. It is recommended to use this function only for special surroundings and not for everyday missions. All alarms can still be viewed in the alarm history on the monitoring unit.

Warning

Loss of important information

Using the Covert Mode requires particular diligence and attention of the user, as otherwise it can lead to serious or lethal injuries of the patient. In this device mode, the user must have direct eye contact to the patient and the device at all times.

Clinic mode

The clinic mode is intended for corpuls3 devices that are used in a hospital. After this function has been enabled by the user OPERATOR, low priority alarms are repeated every 30 s until they are confirmed. High- and medium priority alarms are unchanged. All alarms can still be viewed in the alarm history on the monitoring unit.

Note

For ECG measurement/interpretation there are several ACS alarms available that can be enabled or disabled individually by the person responsible for the device (see chapter 7.4.9 Configuration of ECG Measurement and ECG Interpretation (Persons Responsible for the Device), page 186).

7.4.7 Basic Configuration of the Views (Persons Responsible for the Device)

Basic configuration of the views

Persons responsible for the device can pre-set 6 views as basic configuration and permanently save these in the system settings.

These views are available to user DEFAULT in each mission, but cannot be modified by them. For that, a higher authorisation level is necessary.

Preconfiguration of the views

1. Select in the main menu "Signals" ► "Views". The configuration dialogue opens.

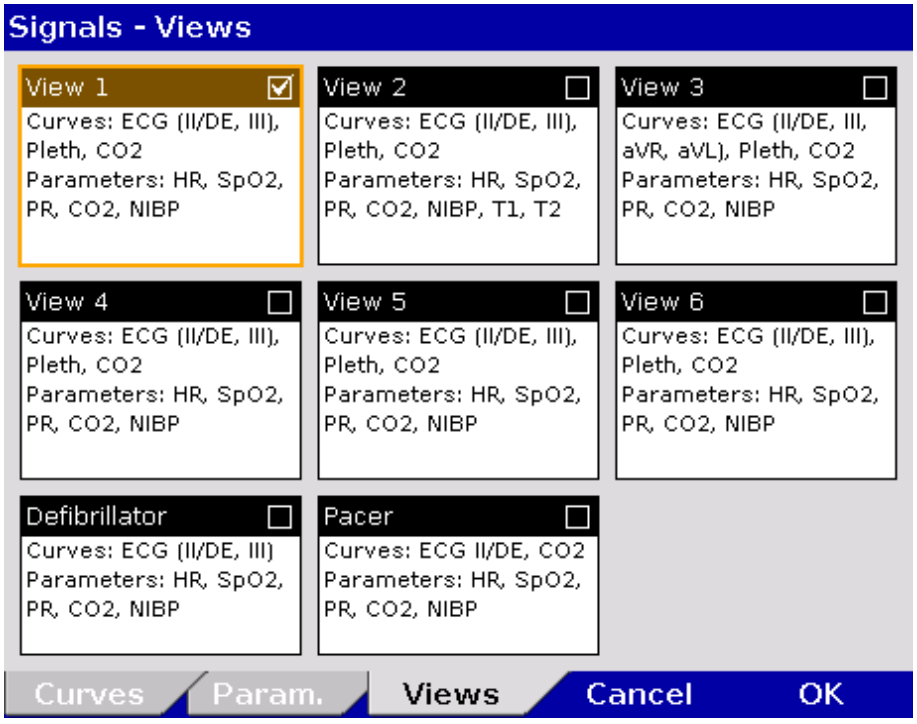

Fig. 7-25 Pre-setting views (illustration may differ)



2. Select the required view with the jog dial and press the **Back** key to save the currently configured view (do not press the jog dial to confirm, only select the required field with the jog dial).
3. A tick is entered in the check box in the top right corner of the selected view.
4. To confirm the settings and close the configuration dialogue, press the softkey [OK]. To retain the previous settings and close the configuration dialogue, press the softkey [Cancel].
5. The setting is only permanently available if the configuration is saved in the system settings (see chapter 7.4.2 General System Settings (Person responsible for the device), page 175).

Note

The views for the defibrillator- and pacer mode can only be adjusted if the user switches first to defibrillator- or pacer mode.

Note

Instead of using numbers to designate individual views, these views can also be assigned names by the user (approx. 13 characters maximum).

To enter a name for a view, proceed as follows:

1. Select in the main menu "Signals" ► "Edit Views". The configuration dialogue opens.

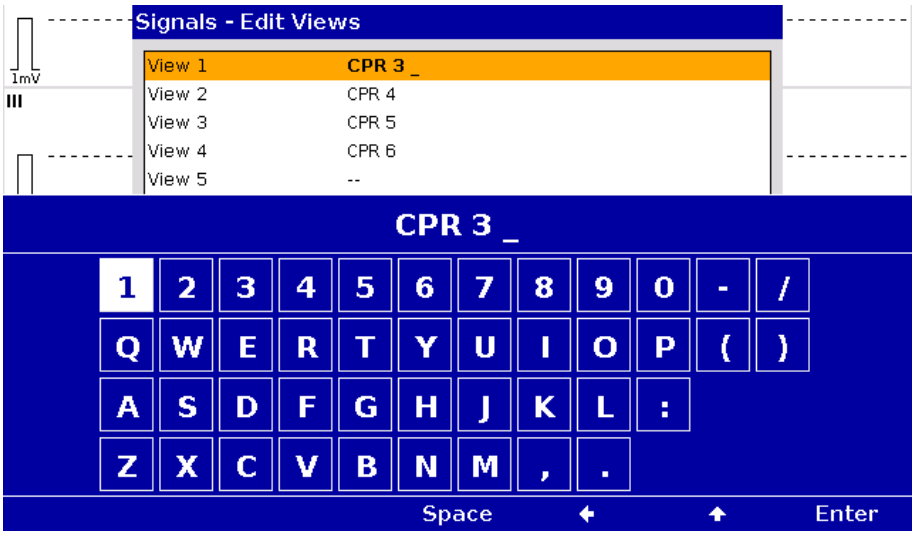

Fig. 7-26 Entering a name for a view

2. Enter the name of the view with the jog dial. Press softkey [Enter] to confirm.
3. To confirm the settings and close the configuration dialogue, press the softkey [OK]. To retain the previous settings and close the configuration dialogue, press the softkey [Cancel].

7.4.8 Configuration of Master Data (Persons Responsible for the Device)

Master data

Persons responsible for the device may configure and permanently save master data in the corpuls3 (see chapter 8.4 Master data, page 197):

Information	Description
Transport type	Type of transport, e. g. "emergency vehicle"
Radio ID	Identification of a radio subscriber in a radiocommunication area, e. g. "FD x-city 1-83-2"
Location	Location of corpuls3
Callback phone	Mobile phone number, e. g. for enquiries to the team
Medical team	Names of the medical team
Name organisation	Operator of corpuls3, e. g. "x-city fire brigade"
Phone organisation	Telephone number of the operator
Device ID	Operator's internal device name, e. g. "Defi no. 7"

Table 7-18 Master data (persons responsible for the device)

Configuration of master data

The following steps are required to enter the master data:

1. Select in the main menu "System" ► "Settings".
2. Press softkey [Master].
3. Select the required master data information with the jog dial.
4. Enter the required information and confirm by pressing the softkey [OK].
5. Save configuration (see chapter 7.4.2 General System Settings (Person responsible for the device), page 175).

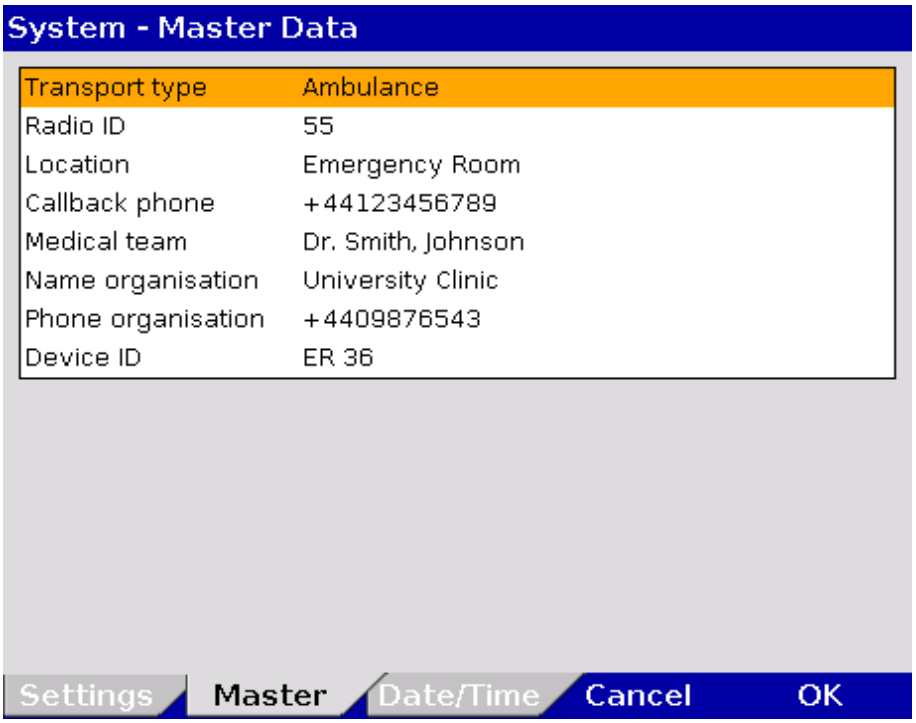

Fig. 7-27 Entering master data (persons responsible for the device)

The user DEFAULT can modify some of these master data during the mission, but cannot permanently save these changes (see chapter 8.4 Master data, page 197).

7.4.9 Configuration of ECG Measurement and ECG Interpretation (Persons Responsible for the Device)

Settings for ECG measurement and ECG interpretation (option)

Persons responsible for the device can set the following configurations:

- Filters (Monitoring and Diagnostic)
- ECG measurement/interpretation therapy algorithm
- AMI and IMI parameter settings for the corpuls **S** therapy algorithm
- ECG measurement/interpretation settings and alarms for the corpuls **ACS** therapy algorithm (following ESC guidelines).

Abbreviations for ECG Measurement/ EKG Interpretation

For an overview of the used abbreviations, see Appendix B List of Abbreviations, page 289.

The configuration dialogue shows the following settings for the D-ECG with the ECG measurement and ECG interpretation option:

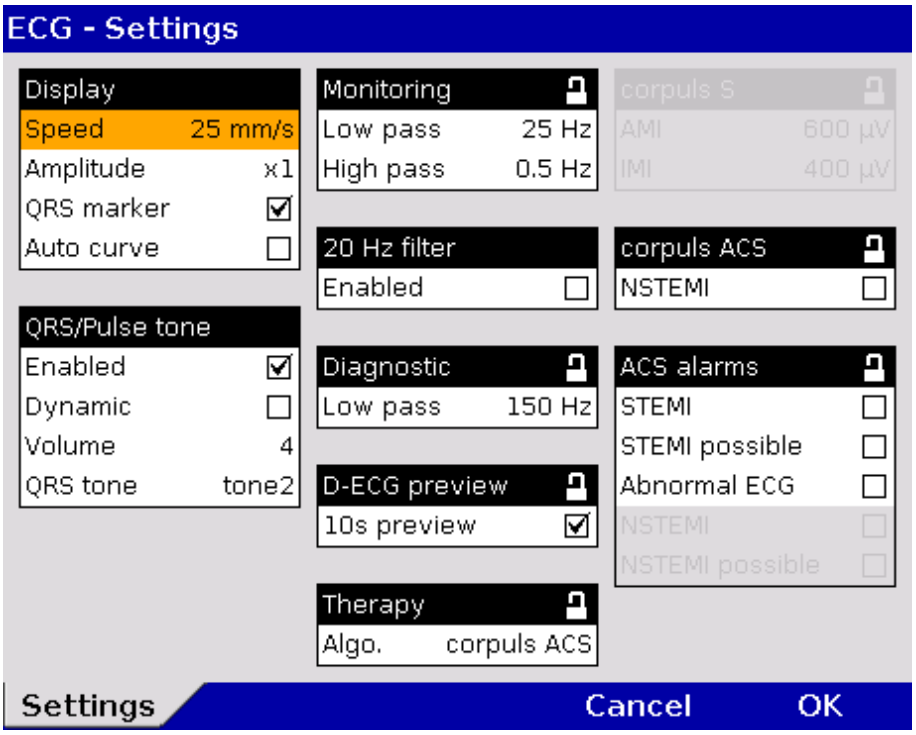

Fig. 7-28 ECG settings (persons responsible for the device, illustration may differ)

Table 7-19 shows the possible values:

Group	Field	Setting	Value
D-ECG preview	HES® Pro	Enabling/disabling the 10 s preview with 6.25 mm/s	Enabled, disabled
Therapy	Algo.	Selection of the measurement/interpretation method	corpuls S, corpuls ACS
corpuls S	AMI	Limit for AMI	500 – 2500 µV increments of 100 µV
	IMI	Limit for IMI	300 – 2500 µV increments of 100 µV
corpuls ACS	NSTEMI	Optional activation of an NSTEMI therapy suggestion for corpuls ACS	Enabled, disabled
ACS alarms	STEMI	Indicates the result "STEMI" of the corpuls ACS algorithm	Enabled, disabled
	STEMI possible	Indicates the result "STEMI possible" of the corpuls ACS algorithm	Enabled, disabled
	Abnormal ECG	Indicates the result "Abnormal ECG" of the corpuls ACS algorithm	Enabled, disabled
	NSTEMI	Indicates the result "NSTEMI" of the corpuls ACS algorithm	Enabled, disabled
	NSTEMI possible	Indicates the result "NSTEMI possible" of the corpuls ACS algorithm	Enabled, disabled

Table 7-19 Values for configuration, ECG measurement and ECG interpretation

10 s preview with 6.25 mm/s

As an alternative to the existing D-ECG preview which shows all curves with a speed of 6.25 mm/s, the D-ECG preview can also show the curves with the same speed as in monitoring mode. The user OPERATOR can enable or disable this option.

corpuls S AMI and IMI

The corpuls3 creates a therapy suggestion with the corpuls **S** therapy algorithm which evaluates, among other items, ST deviations. If the ST deviations are significant enough, implementation of the PCI protocol is recommended.

Two limit values can be set for the sum of ST values measured during the D-ECG. These limits are designated AMI and IMI and represent the degree of sensitivity for deciding in favour of a therapy recommendation. The AMI limit (in µV) applies in the event of an anterior infarction, the IMI (in µV) value in the event of an inferior infarction.

If the ECG interpretation by corpuls3 indicates a myocardial infarction and if the sum of the specific ST values exceeds the pre-set limits for AMI or IMI, the device suggests performing a PCI therapy.

The following values are recommended for AMI and IMI:

AMI: 800 µV
IMI: 600 µV

corpuls ACS

As an alternative to corpuls **S** the corpuls3 generates with the therapy algorithm "corpuls **ACS**" a therapy suggestion that follows the guidelines of the ESC. Based on changes in the ECG, the algorithm differentiates between a STEMI, NSTEMI (optional) or a normal ECG rhythm.

Option NSTEMI

If the checkbox "NSTEMI" in the group "corpuls ACS" is selected, the device also issues NSTEMI therapy suggestions.

The algorithm also checks the ECG for the presence of the Wolff-Parkinson-White (WPW) syndrome, of intraventricular excitation propagation disorders, of an implanted pacer, of QRS intervals longer than 120 ms and of a left bundle branch block. In these cases, if enabled, the alarm/message "Abnormal ECG" is issued.

Note The person responsible for the device (user OPERATOR) can configure, whether an alarm/message should inform the user of findings like "Abnormal ECG", "STEMI" or "NSTEMI" already during the ECG analysis.

Note As the corpuls **ACS** algorithm closely follows the ESC guidelines, it is recommended for measurement and interpretation of a D-ECG.

Note A licence is required for the use of the ECG measurement and ECG interpretation options. Please contact your authorised service and sales partner to obtain this licence.

Note Information on the installed version of the ECG measurement and ECG interpretation program can be found in the system info. It is listed in the “Options” field in the line “ECG interpretation”.

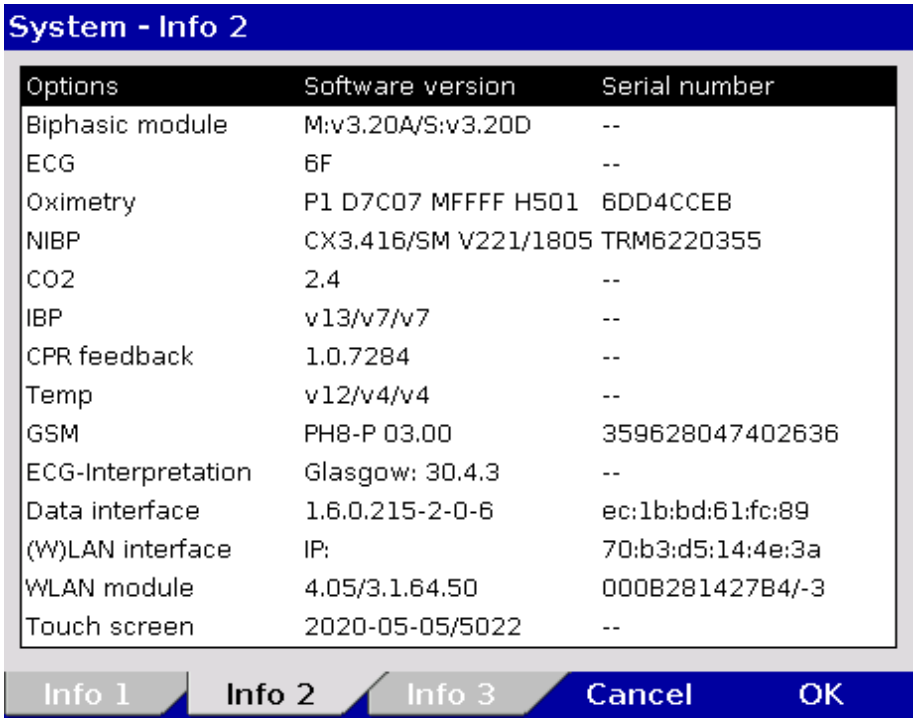

Fig. 7-29 ECG measurement and ECG interpretation version in system info

7.4.10 Demo Mode (Persons Responsible for the Device)

Demonstration at trainings

The user OPERATOR can activate the demo mode for training purposes. This mode shows curves and parameters and demonstrates all functions and possible configurations.

Activating the demo mode

1. Select in the main menu "System" ► "Demo".
2. In the message line the text "**Demo mode on**" appears.
3. The screen shows curves and parameters from the internal memory.

Deactivating the demo mode

To deactivate the demo mode, the corpuls3 has to be switched off and on again. Alternatively, select again in the main menu "System" ► "Demo". The confirmation prompt "**Leave Demo mode - Power off?**" appears. To leave the demo mode and switch off the device, press softkey [OK]. To stay in demo mode, press softkey [Cancel].



Warning

Risk of delayed therapy

The use of the demo mode during patient care is strictly forbidden.

The demo mode may only be used for training purposes.



Warning

Risk of inadequate therapy

If the corpuls3 is currently in demo mode and should be used for patient care, the device has to be restarted first.

7.4.11 Data Protection Settings (Persons responsible for the device)

Selection of Data

Persons responsible for the device can configure which data from the health insurance card or manually entered data should be available in the corpuls3 on the screen, on the printout or for telemetry. The telemetry settings are valid for Bluetooth®-, GSM-, WLAN and LAN connections.

Parameter Race

As of software version 3.0, the person responsible for the device can activate the option of recording the patient's race, which is particularly of interest for research purposes.

Symptom onset

The parameter „Symptom onset“ can be enabled by the user OPERATOR as of software version 4.1 and allows to record further information for patient documentation as free text.

Data management

This parameter "Anonymize" is enabled by default as of software version 4.2 and can be disabled by the operator. All identifying personal data from previous missions are anonymised and displayed as "--" in the mission browser, only the current mission can be reviewed.

Reminder

As of software version 4.4 the parameter "Case number" can be enabled by the operator. If neither the name of the patient nor a patient ID or a case number have been entered for identification of the mission/patient, the device shows the confirmation prompt "**No case number - Power off?**" before switching off. The user can then enter the lacking data by pressing the softkey [Edit].

Configuration

For the configuration the following steps are necessary:

1. Select in the main menu "Patient" ► "Settings".

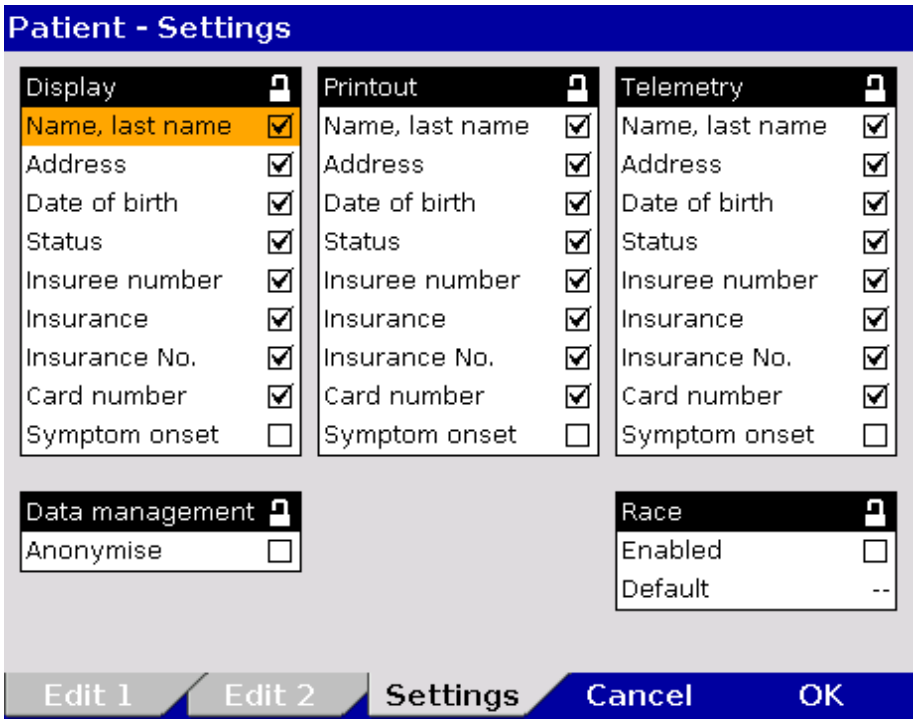

Fig. 7-30 Settings for the insurance card reader (persons responsible for the device)

2. Select the required information with the jog dial and press to confirm.
3. To record the parameter "Race" in the patient data, select the checkbox "Enabled" in the group "Race".
4. To define a default race, select required information in the field "Default". The following options can be selected: African, Caucasian, Native Am., Asian, Pacific, Unknown, -- (no selection).
5. If personal data should not be anonymised, de-select the checkbox "Anonymize" in the group "Data management".
6. To enable the confirmation prompt "`No case number - Power off?`", select the check box "Case number" in the group "Reminder".
7. Save configuration (see chapter 7.4.2 General System Settings (Person responsible for the device), page 175).

Symbol insurance card reader

A monitoring unit that is equipped with an insurance card reader (option) can be recognised by the card symbol at the card slot.



7.4.12 Configuration of the Metronome and CPR feedback (Persons Responsible for the Device)

Advanced Metronome Settings

Persons responsible for the device can select advanced settings for the metronome and for the CPR feedback system in order to adapt to local variations of resuscitation algorithms. For this purpose, the

- Compression rate
- Duration of the ventilation phases and
- Reminder tone for ventilation (Cont. vent.)

can be configured for adults and children.

Algorithm

The person responsible for the device can adapt the resuscitation protocol to locally applicable variations. Besides the currently valid guidelines, a 3 min-resuscitation protocol is available. Furthermore, the CPR cycle can be visualised by displaying a pie chart.

For configuration, proceed as follows:

1. Select in the main menu "Defib" ▶ "CPR".

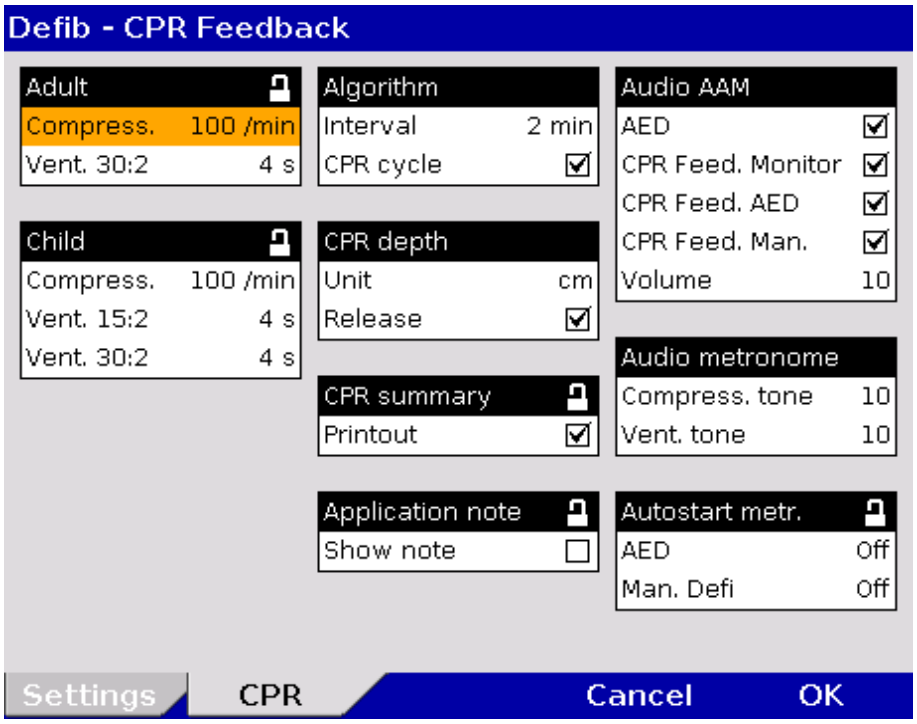

Fig. 7-31 Extended settings for CPR feedback

2. Select the required metronome- or CPR feedback settings with the jog dial and confirm.
3. Select the required setting and confirm with softkey [OK].
4. Save configuration (see chapter 7.4.2 General System Settings (Person responsible for the device), page 175).

	Field	Setting	Values
Adult	Compress.	Compression frequency	80 – 120 1/min; increments of 5 1/min
	Vent. 30:2	Duration of ventilation at ratio 30:2	3 – 6 s; increments of 1 s
	Cont. vent.	Reminder tone for ventilation	Off, 8-20/min, increments of 1/min
Child	Compress.	Compression frequency	80 – 140 1/min; increments of 5 1/min
	Vent. 15:2	Duration of ventilation at ratio 15:2	3 – 8 s; increments of 1 s
	Vent. 30:2	Duration of ventilation at ratio 30:2	3 – 8 s; increments of 1 s
	Cont. vent.	Reminder tone for ventilation	Off, 8-20/min, increments of 1/min
Algorithm	Interval	Duration of the resuscitation protocol	2 min; 3 min
	CPR cycle	Display of pie chart	Enabled, disabled

	Field	Setting	Values
CPR depth	Unit	Selection of the length unit	cm; in
	Release	The spoken message **`Fully release`** can be disabled	Enabled, disabled
CPR summary	Printout	Printout of the CPR summary can be disabled.	Enabled, disabled
Application note	Show note	The application note for the CPR feedback sensor can be enabled.	Enabled, disabled
Audio AAM	AED	Spoken messages can be disabled in the individual modes.	Enabled, disabled
	CPR Feed. Monitor		Enabled, disabled
	CPR Feed. Man.		Enabled, disabled
	CPR Feed. AED		Enabled, disabled
	Volume	Setting the volume	Off, 3-10
Audio metronome	Compress. tone	Configuration of the metronome sounds	3-10
	Vent. tone		Off, 3-10
Autostart metr.	AED	Automatic start of the metronome when calling up a therapy mode	Off; Adult 30:2; Adult cont.; Child 30:2; Child 15:2; Child cont.
	Man. Defib	Automatic start of the metronome when calling up a therapy mode	Off; Adult 30:2; Adult cont.; Child 30:2; Child 15:2; Child cont.

Table 7-20 Values for metronome settings

Unit The unit of the reference range for the compression depth can be switched from centimetres to inches.

Message "Fully release" The user OPERATOR can deactivate the spoken message "Fully release" (see chapter 7.4.12 Configuration of the Metronome and CPR feedback (Persons Responsible for the Device), page 190).

CPR summary If the checkbox "Printout" is selected, the CPR summary can be printed out for mission debriefing via "Printer" ► "CPR summary" or via the mission browser.

Application note CPR feedback The CPR feedback system starts automatically when the CPR sensor is applied. A picture and a message appear, showing the recommended position of the CPR sensor (see Fig. 5-20). To close the message, press softkey [OK]. The display of the application note can be disabled by the user OPERATOR.

Audio AAM The spoken message of the CPR feedback can be disabled or enabled separately for AED-, manual and monitoring mode. The text in the message line is still displayed and is recorded for the option CPR summary.

Autostart Metronome The user OPERATOR can configure that the metronome is started automatically when a therapy mode is called up. This setting can be configured separately for the AED- and for the manual mode.

7.4.13 Configuration of Non-Invasive Blood Pressure Measurement (NIBP) (Persons Responsible for the Device)

Persons responsible for the device can configure advanced settings for interval settings, the initial mode and the initial pressure.

Settings

1. Select in the main menu "NIBP" ► "Settings". The configuration dialogue opens.

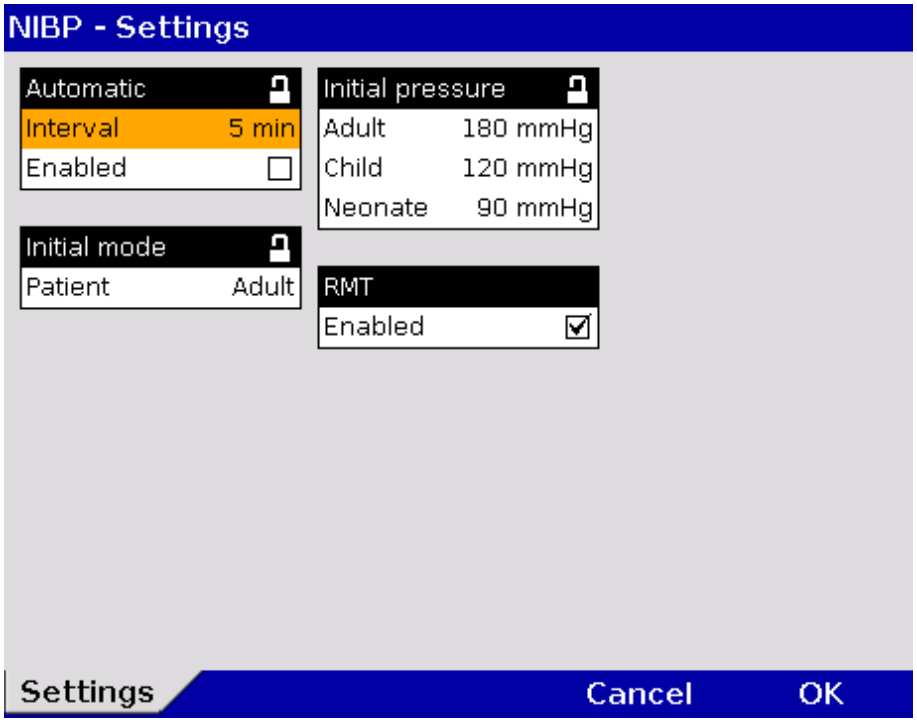

Fig. 7-32 NIBP settings

2. Select the settings. Table 7-21 shows the possible values.

Field	Setting	Values	Increments
Automatic	Interval	1 min, 2 min, 3 min, 5 min, 10 min, 15 min, 30 min, 60 min	–
	Enabled	Enabled, disabled	--
Initial mode	Patient	Adult	-
		Child	
		Neonate	
Initial pressure	Adult	120 to 280 mmHg	10
	Child	80 to 170 mmHg	10
	Neonate	60 to 140 mmHg	10
RMT	Enabled	Enabled, disabled	-

Table 7-21 Values for NIBP monitoring

3. Select the required interval for automatic NIBP measurement.
4. If the checkbox "Enabled" is ticked, automatic interval measurement will be activated when the NIBP menu is called up and the softkey [Start] is pressed.
5. To confirm the settings and close the configuration dialogue, press the softkey [OK]. To retain the previous settings and close the configuration dialogue, press the softkey [Cancel].

Note NIBP monitoring is performed in the mode that was last selected: "Adult", "Child" or "Neonate".

R-wave Motion Tolerance

SunTech R-wave Motion Tolerance (RMT)-Technology uses the monitoring ECG signal to qualify the validity of oscillometric pulses for an enhanced level of motion tolerance on patients in transport situations. Particularly in case of motion artefacts (shivering, convulsions), weak pulse and certain types of arrhythmias, the quality of the NIBP measurement is optimised. The user can disable the function "RMT" curves in the NIBP settings.

Test menu

For further information on maintenance and testing of the corpuls3 that go beyond the contents of this user manual, contact the service technicians of an authorised sales and service partner.

7.4.14 Printer Settings (Persons Responsible for the Device)

Persons responsible for the device can configure the feed speed for printing event ECGs and the shock protocol.

Settings Feed Speed

1. Select in the main menu "Printer" ► "Settings".The configuration dialogue opens.

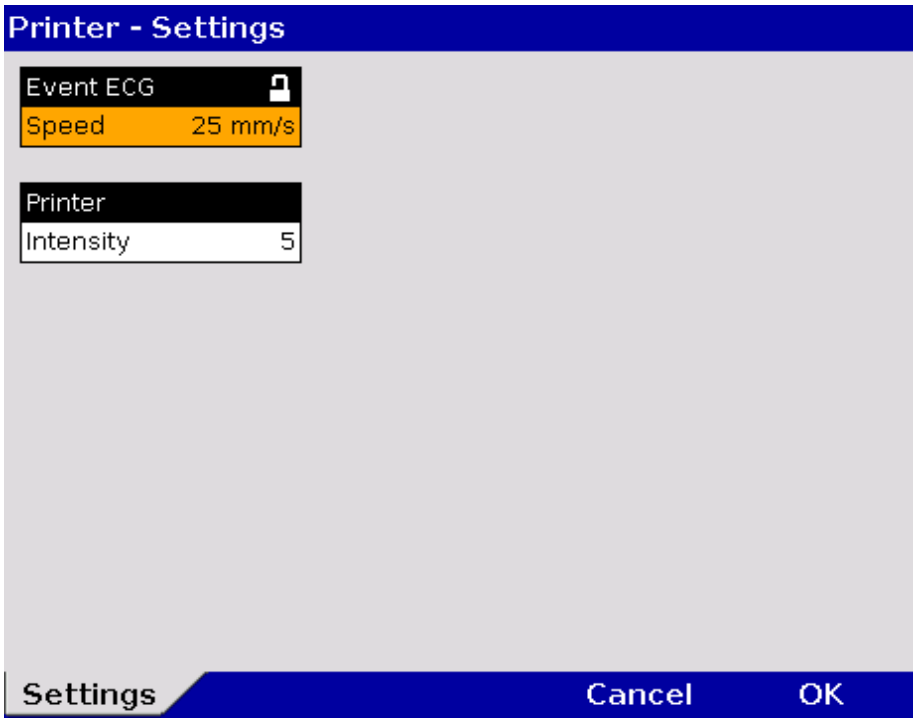

Fig. 7-33 Settings feed speed (persons responsible for the device)

2. Select the settings. Table 7-22 shows the possible values.

Fields	Settings	Values
Event ECG	Speed	12.5 mm/s, 25 mm/s
Printout	Intensity	0-20

Table 7-22 Settings feed speed of event ECG (persons responsible for the device)

At 12.5mm/s 10 seconds before and after the event are printed. At 25mm/s 5 seconds before and after the event are printed.

Adjusting the printer intensity

See chapter 7.1.3 Printer settings, page 160.

8 Data Management

8.1 Creating a Patient File

Switching on/off the corpuls3

A new data record is automatically created each time the corpuls3 is switched on.

An unambiguous mission number is generated, which is printed in the first line on the first page of each printout. In addition, the time and date are automatically logged.

Test Mission

If instead of therapy electrodes a testbox/testload or a corpuls simulator is connected or the plug is lodged in the socket, the device asks if the mission should be marked as a test mission. If the user confirms by pressing the softkey [Yes], the Patient ID is displayed as "TEST".

For as long as the corpuls3 is in use, all the saved data will be assigned to this mission and saved on the CompactFlash® card (see chapter 8.3 Handling Data, page 196). The entered data can be modified or completed during the mission. Changes made to the data set are marked in the protocol printout.

For entering changes, select "Patient" ► "Edit Data" in the main menu.

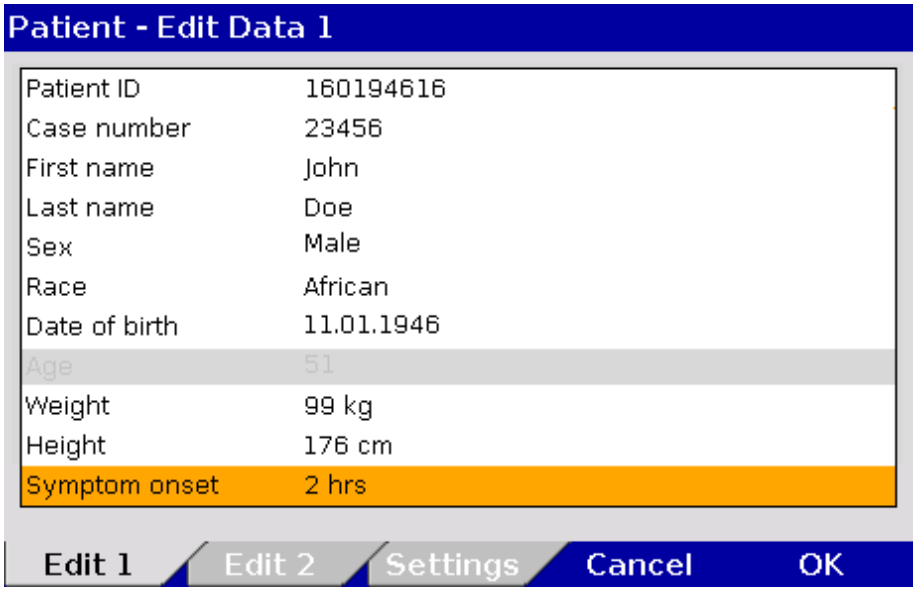

Fig. 8-1 Entering patient data, part 1

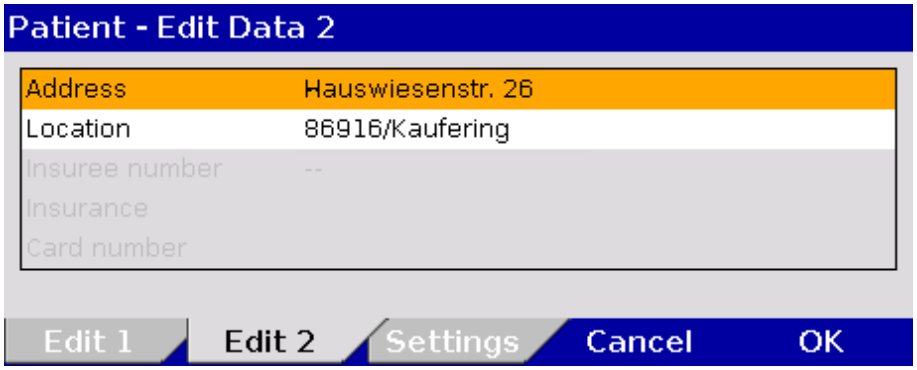

Fig. 8-2 Entering patient data, part 2

Note

The age of the patient is automatically calculated when the date of birth is entered and cannot be edited. If no date of birth is entered, the age can be edited.

Note The information pertaining to the insurance card can only be imported via the insurance card reader and cannot be edited. To do so, the window "Patient - Edit Data" has to be closed.

Security Risk Data on the insurance card could be manipulated. Check if the data on the insurance card have been transferred correctly.

As of software version 3.0 it is possible to use the parameter "Race" in the patient data. The field "Race" is only available, if the option has been activated by the user OPERATOR (see chapter 7.4.11 Data Protection Settings (Persons responsible for the device), page 189).

Symptom onset As of software version 4.1 it is possible to use the parameter "Symptom onset" in the patient data. The field "Symptom onset" is greyed out by default and has to be activated by the user OPERATOR via checkbox (see chapter 7.4.11 Data Protection Settings (Persons responsible for the device), page 189).

8.2 Event key



The corpuls3 has the key **Event** located in the top left-hand corner of the monitoring unit.

If the **Event** key is pressed briefly, a time stamp is saved which marks the current ECG data and parameter values. Based on this marking, this data can subsequently be located in the data memory, viewed and assessed. The message **`Event recorded`** appears in the message line.

Audio recording and screenshots If the audio recording option is enabled, pressing the **Event** key additionally stores a 15 second recording of the surrounding sounds (5 s before and 10 s after pressing the key). The audio recording appears as manual event in the protocol. Furthermore, by enabling the screenshot option, a screen copy at the time of the event can be saved as a picture file. The audio recording and the screenshots can be played and viewed with the software corpuls.manager **REVIEW** (see chapter 8.6 Analysis of the Data with corpuls.manager REVIEW, page 201).

Selecting events If the **Event** key is held for more than 1 seconds, the event list appears, in which the first entry "**`Generic`**" is marked automatically. With the jog-dial the user can select pre-configured events and add them to the mission protocol. To confirm a selected list entry, press the jog dial. The message **`Event [TEXT] recorded`** appears in the message line. To delete the last event, select "**`Cancel Last`**" and confirm.

If no pre-configured event has been chosen, the entry "**`Cancel Last`**" is greyed out.

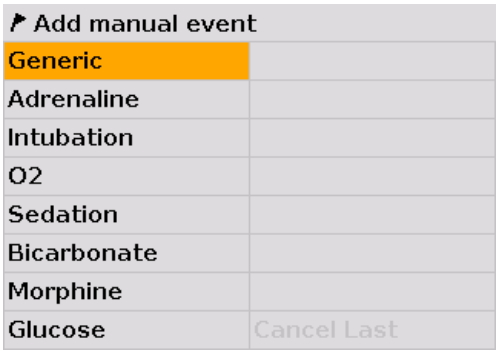

Fig. 8-3 Selecting pre-configured events

Note By pressing the **Event** key briefly or by holding down the **Event** key for more than 1 seconds and selecting the event "**`Generic`**", a time stamp is saved which marks the current ECG data. If another pre-configured event is selected, no ECG data are saved, only an event is added to the protocol.

8.3 Handling Data

The CompactFlash® card of the patient box is the central memory location for all recorded data.

Insert the CompactFlash® card with the corpuls3 label (incl. memory capacity) facing towards the user and following the direction of the arrows into the card slot at the left-hand side (seen from the front) of the patient box. If necessary, remove the accessory bag.

Note If the CompactFlash® card is full (1000 missions or more) or not inserted into the patient box, the corpuls3 cannot record either a long-term ECG or a diagnostic ECG. Consequently, these data are missing when a log is created.

Note The current date and time of the mission have to be deposited in the corpuls3 to enable a later allocation of mission data.



Caution

Risk of inadequate therapy

Make sure that only an original corpuls3 CompactFlash® card (P/N 04236.3) with sufficient memory capacity is used (minimum 50 MB, if audio recording is disabled).

Using other CompactFlash® cards may result in safety-critical system malfunctions or the voiding of warranty.

Note Save the contents of the CompactFlash® card to a PC at regular intervals on external storage media.

Note If the alarm message "CF `card error`" is displayed, the data should be saved on a computer. Then, the CF card must be re-formatted (see chapter 7.4.2 General System Settings (Person responsible for the device), page 175).



Caution

Risk of system errors

Never insert or remove the CompactFlash® card during the mission.

Only insert or remove the CompactFlash® card when the patient box is switched off.

Uploading missions to a server If the checkbox "Enabled" in the group "Mission upload" is ticked and a connection is established, the recorded missions can be uploaded automatically to an FTP server after the mission is finished and the device is switched off.

8.4 Master data

Master data Persons responsible for the device can configure and save master data (see chapter 7.4.8 Configuration of Master Data (Persons Responsible for the Device), page 185).

These master data are partly contained in the D-ECG printout. If a D-ECG is transmitted to the hospital by fax (option), this D-ECG can be identified unambiguously by means of these master data.

Some of these master data can be modified by the user DEFAULT, e.g. Transport type, Radio ID, etc.

Note These modifications are not saved and only apply to the current mission. After the corpuls3 has been switched off, the master data, originally configured by the person responsible for the device, apply once again.

8.5 Browser Key

8.5.1 Protocol

Browser

The corpuls3 automatically generates a log which can be printed out by pressing the **Browser** key.

Each log printout has the word "PROTOCOL" on the first page.

The log consists of an overview with data specific to the mission, person and device in addition to a chronological list (see Table 8-1, page 198).

If a protocol is printed during the mission, this is saved as the manual event "Protocol printout" in the chronological event list.

The log overview contains the following data:

Data	Explanation
Mission	Mission number; generated automatically when switching on the device
Printout	Time of protocol printout
Mission started at	Date and time at switch-on of the device
UTC	Universal Time Coordinated
Patient	Last name, first name: Can be edited via the main menu "Patient" ▶ "Edit Data".
Patient ID	Identification number Can be edited via the main menu "Patient" ▶ "Edit Data".
Case number	Intra-hospital identification number Can be edited via the main menu "Patient" ▶ "Edit Data" or via an optional barcode scanner
Date of birth (Age)	Can be edited via the main menu "Patient" ▶ "Edit Data". The age is calculated automatically when the date of birth of the patient is entered.
Sex	Can be edited via the main menu "Patient" ▶ "Edit Data".
Weight	Can be edited via the main menu "Patient" ▶ "Edit Data".
Height	Can be edited via the main menu "Patient" ▶ "Edit Data".
Vital parameters	Trend values of the last minute before the protocol printout (minute mean values)
Device	Identification number of the device
Radio	Radio call name of the team
Medical team	Names of the medical team
Callback phone	Mobile phone number, e. g. for enquiries to the team
Filter	Filter settings for ECG- and mains filter
Software version	Current software version (e.g. REL-3.0.0_C3_BP)

Table 8-1 Log overview

The entries in the chronological list all have the same structure and contain the time stamp, the precise designation and the ECG number of the event.

The following example shows an extract from a printed protocol:

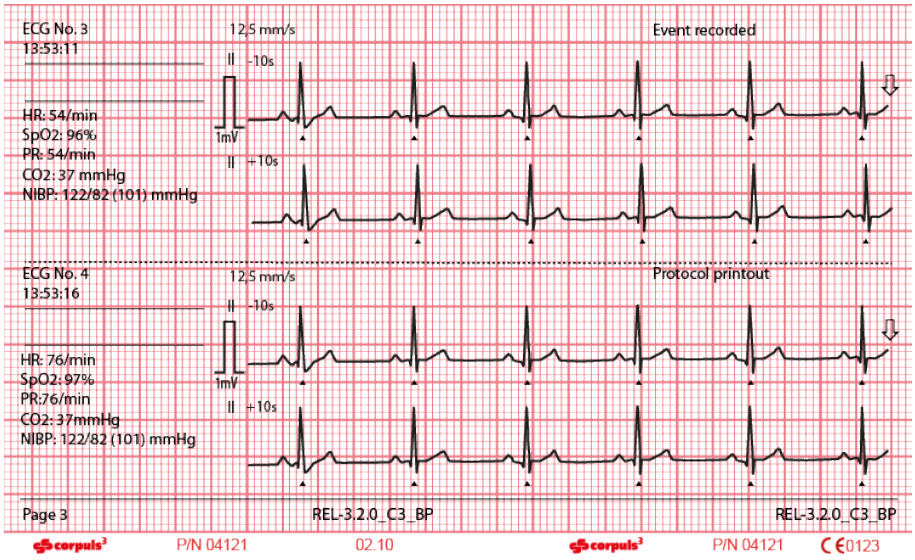

Fig. 8-4 Example of an ECG in the protocol at the time of an event

The following entries are included in the chronological list:

- alarms, physiological and technical (configurable, see chapter 7.4.6 Alarm Configuration (Persons Responsible for the Device), page 182)
- beginning and end of mission
- defibrillation events with selected energy level, measured energy, impedance and selected defibrillation mode
- printer actions (protocol printout; real-time printout; D-ECG printout, shock protocol printout)
- corpuls3 switch-on time
- internal software errors
- Manual events
- Pacer events
- Switch to monitoring mode

mV-mark The millivolt mark (in form of a rectangular impulse) is located at the left margin of the curve field (mV-mark). Its height depends on the set amplification of the ECG curve. The mV mark shows an amplitude height of 0.5 or 1 mV for comparison, so that the scale of the ECG curve displayed can be set in relation.

Markings for folding The real-time printout has vertical markings on the upper and lower edges that help to fold the printout quickly. The folded printout fits the width of a standard sheet of paper (DIN A4) and can be attached there for documentation.

Note Do not separate or connect the modules while the protocol is being printed, otherwise parts of the printout will be missing.

Note If no CompactFlash® card is present while using the corpuls3 or if the inserted card is full, no complete protocol printout can be made.

If the checkbox in the group "Shock Protocol" in the defibrillator settings is selected, a protocol containing information on the patient, vital parameters, ECG-curve, selected energy, patient impedance and released energy is printed automatically after a defibrillation. This feature is enabled by default and can be disabled by the Operator.

The mission data of the ventilator Medumat Transport of the company WEINMANN Emergency Medical Technology GmbH + Co. KG can be printed out on the corpuls3 by means of the Bluetooth® interface.

8.5.2 Mission Browser

Browser

If the **Browser** key is held down for more than 1 s, the mission browser opens. The mission browser gives an overview of all the missions saved on the CompactFlash® card and its current free memory capacity. The missions are listed chronologically, with the most recent mission on top of the list. The mission browser makes it possible to print out the protocol of a mission, the trend data or the available D-ECGs and longterm ECGs several times or at a later point in time. D-ECGs from an old missions can also be sent later on.

Additionally, the CPR summary can be printed out. The mission contents in the column "Data" are represented by symbols.

	Symbol Diagnostic ECG	Indicates that the mission contains D-ECG data.
	Symbol Resuscitation	Indicates that the mission contains CPR data.
	Symbol Defibrillation	Indicates that the mission contains defibrillation data.

Table 8-2 Symbols for mission contents

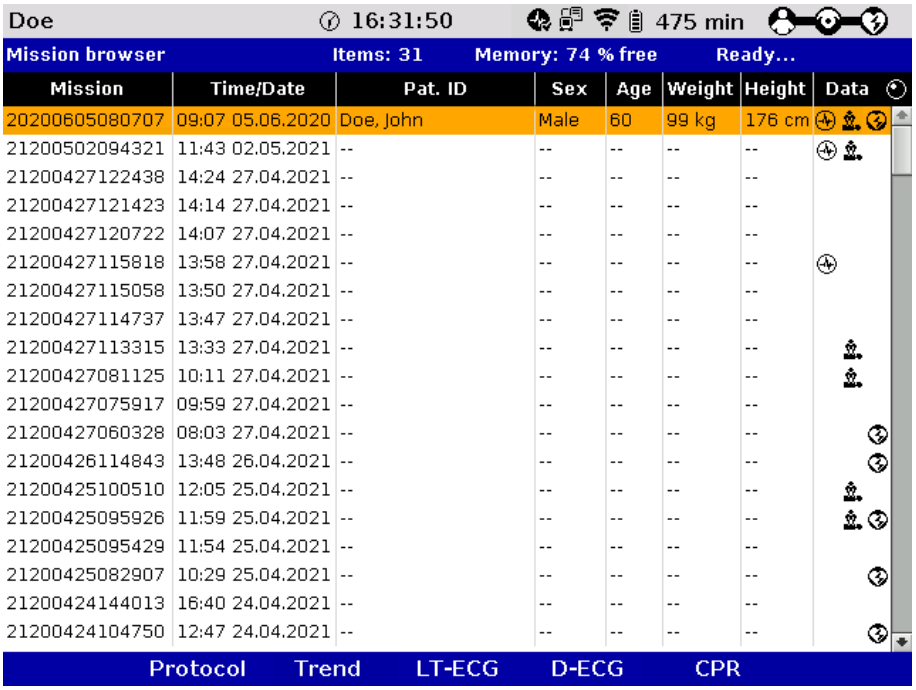

Fig. 8-5 Mission browser

The individual missions can be identified based on the following data:

- Unit application number (mission)
- Time/Date
- Patient name (Pat. ID)
- Sex (m/f)
- Age
- Weight
- Size
- Symbol for D-ECG
- Symbol for CPR
- Symbol for defibrillation

The required mission can be selected with the jog dial. It is then possible to print the log by pressing the softkey [Protocol].

The softkey [Trend] opens the trend browser of the selected mission. The softkey [Config.] opens a configuration dialogue, in which the displayed trend parameters can be selected or deselected via checkbox.

Note The current mission is always shown on top of the list, independent from time and date.

Note A protocol that has been compiled with an older software version cannot be printed at a later point. The softkey [Protocol] is greyed out in this case.

Note The intended purpose of the mission browser and of the D-ECG browser is limited to the analysis of the mission after monitoring of the patient.

D-ECG browser With the jog dial those missions that contain one or more D-ECGs can be selected and opened in the D-ECG browser by pressing the softkey [D-ECG]. The available D-ECGs can be selected individually and printed out by pressing the softkey [Print].

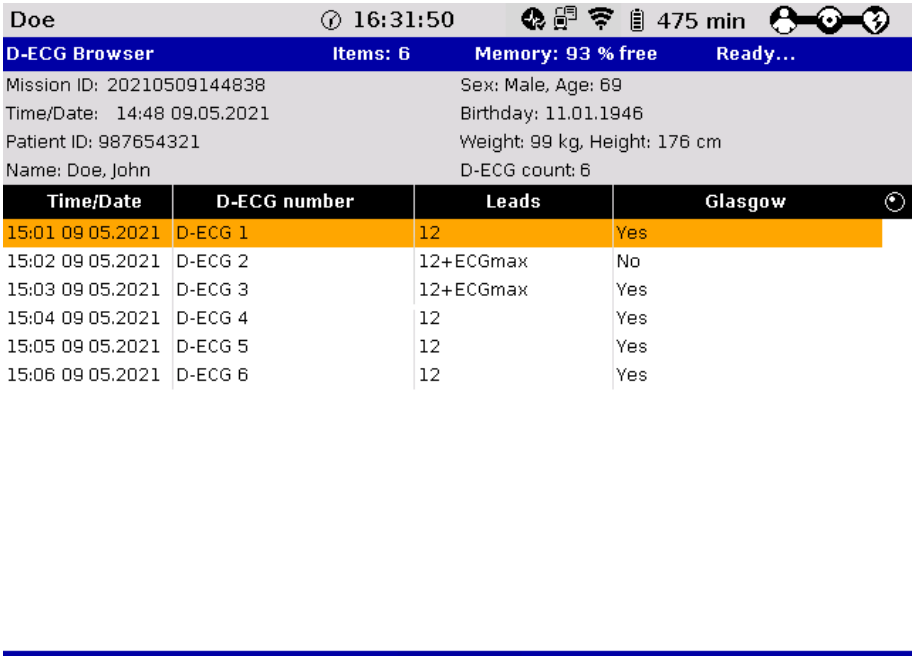

Fig. 8-6 D-ECG Browser

Sending later With the softkey [Send], the marked D-ECG can be sent later on (see chapter 9.4.2 Sending a D-ECG, page 216).

Longterm ECG browser With the softkey [LT-ECG] the longterm ECG can be opened in the longterm ECG browser and printed out at a later point in time (see also chapter 6.5 Longterm ECG, page 128).

8.6 Analysis of the Data with corpuls.manager REVIEW

The data saved on the CompactFlash® card (device software version 1.7.2 or higher) can be viewed, further processed and analysed with the PC software program corpuls.manager **REVIEW** (version 1.3 or higher).

Note Information regarding the use of corpuls.manager **REVIEW** can be found in a separate user manual for corpuls.manager **REVIEW** (P/N 04135.02).

Note Information regarding data protection can be found in Appendix N Note on Data Protection, page 342.

8.6.1 Recording of Realtime Data (RTD) tracks

As of software version 3.0 the user OPERATOR can select every parameter displayed on the corpuls3 to be recorded on the CF card. The recording of real-time data tracks is particularly of interest for research purposes.

1. Select in the main menu "Signals" ► "Record".
2. Select the parameters to be recorded.

Note It is recommended to record a maximum of 8 RTD tracks simultaneously, because due to the recording the data volume of the mission increases significantly and there may be gaps in the data if more than 8 tracks are recorded simultaneously.

8.7 Screenshot

Printing a screenshot

If the **Print** key is held down for more than 1 seconds, a screenshot is printed out. It shows the screen contents at the time of the printout. The following further information is contained on the printout:

- Date and time of the screenshot printout
- Unit application number (mission)
- User level
- Serial number of the monitoring unit
- Software version of the corpuls3
- Charging status of the batteries in percent (in this order: patient box, monitoring unit, defibrillator/pacer)

Note In addition to the printout of the screen copy, an image file is saved on the CF card. The screenshot can be viewed with the software corpuls.manager **REVIEW** (see chapter 8.6 Analysis of the Data with corpuls.manager REVIEW, page 201).

8.8 Insurance card reader (option)

The insurance card reader allows to read out the patient data stored on the insurance card of the patient so that they are available to the data management in the corpuls3.

The patient data can be completed or changed during the mission by manually entering information. Persons responsible for the device can configure and save permanently which patient data from the insurance card should be displayed, printed or sent by the corpuls3 (see chapter 7.4.11 Data Protection Settings (Persons responsible for the device), page 189).

1. Insert the insurance card (with the chip oriented towards the front of the monitoring unit) into the insurance card reader on the right-hand side of the monitoring unit.

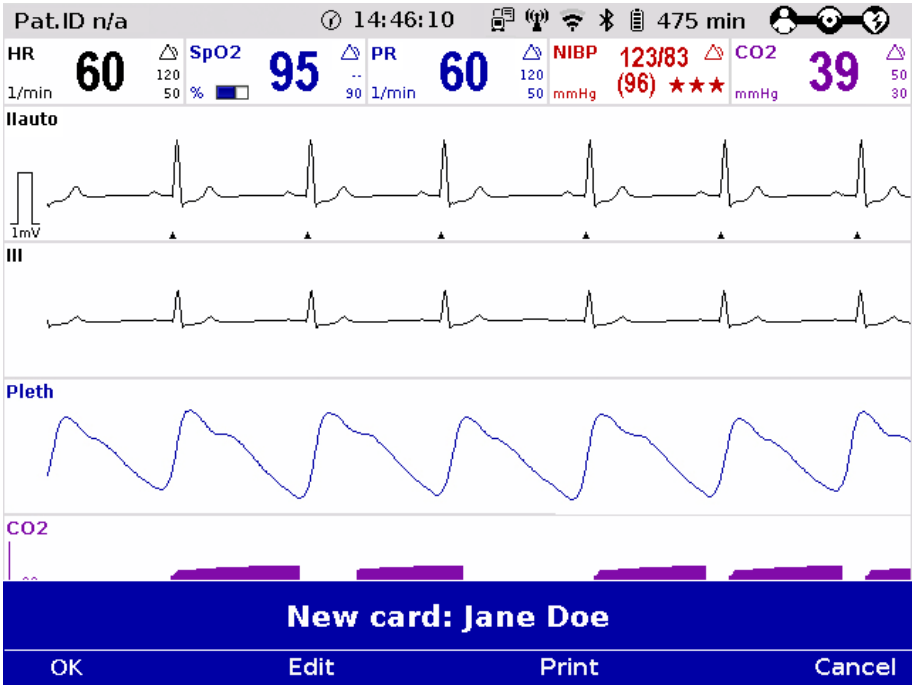

Fig. 8-7 Readout of patient data from insurance card reader

2. The data set from the insurance card can be accepted or edited by means of the softkeys [OK] and [Edit].
3. Press the softkey [Print] to print out the data set from the insurance card and save the data set.

Alternatively, patient data that are not greyed out, can also be entered manually. For this, select in the main menu "Patient" ► "Edit Data".

The data set from the insurance card can be deleted from the corpuls3. For this, select in the main menu "Patient" ► "Erase Data".

Caution

Risk of inadequate therapy

Patient and insuree have to be one person, otherwise the results of the ECG analysis can be misinterpreted.

Note

The insurance card reader is currently only available for customers in Germany, Austria, Switzerland, Belgium, Estonia, Italy and France. Further countries are available upon request.

Symbol insurance card reader

A monitoring unit that is equipped with an insurance card reader (option) can be recognised by the card symbol at the card slot.

9 Telemetry 3.0

Configuration Telemetry (Option)

Persons responsible for the device can set the following configurations:

- Activation and configuration of data interfaces
  - GSM modem
  - GPRS interface
  - LAN interface
  - WLAN interface
  - Bluetooth interface
- Activation and configuration of telemetry services
  - corpuls.mission **LIVE** (Live data, D-ECG upload)
  - D-ECG transmission (Fax)
  - Mission upload to FTP server
- Configuration of W/LAN networks
- Configuration of telemetry connections (phonebook)
- Configuration of Bluetooth connections.

Offline mode

The corpuls3 has an offline mode. This mode disables all external connection technologies (WLAN, LAN, GSM, Bluetooth) at once. External connection technologies are radio connections for communication with external receivers. Internal connection technologies are the radio connections between the modules of the corpuls3.

To disable all radio connections (internal and external), the device has to be operated in offline mode and as a compact device.

The airplane symbol in the status-/alarm line indicates that the offline mode is active. Apart from the offline mode, it is possible to disable data interfaces individually.

Automatic System Supervision Function

The device is equipped with an automatic system supervision function that continuously detects and compensates for system deviations between internal modules.

If relevant inconsistencies are detected, that can't be resolved otherwise, the affected modules will restart automatically. This restores the intended overall system functionality and module synchronization.

During this automatic restart, some functions may be temporarily unavailable. This automatic restart is a part of the system architecture.

No action is required.

1. Wait until the restart is complete.

9.1 Configuration of Telemetry (Persons Responsible for the Device)

Configuration of data interfaces

1. Select in the main menu "Telemetry" ► "Settings". The configuration dialogue opens.

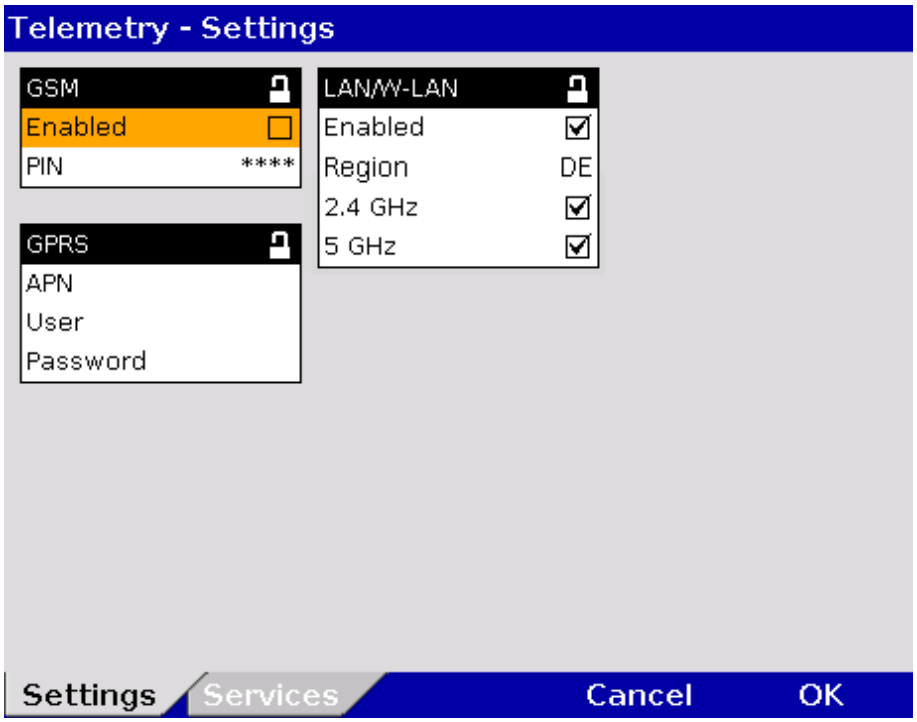

Fig. 9-1 Telemetry settings (Persons responsible for the device)

Table 9-1 shows the possible values:

Group	Field	Setting	Value
GSM	Enabled	Enables or disables aircraft mode	Enabled, disabled
	PIN	Code number	Numbers from 0-9
GPRS	APN	Access point to the data net	Numbers, symbols and letters
	User	User name	Numbers, symbols and letters
	Password	Authentication (user-definable combination)	Numbers, symbols and letters
(W)LAN	Enabled	Activation of the W/LAN interface	Enabled, disabled
	Region	Country codes for W-LAN regional settings	AU, AT, BE, BR, CA, CN, CY, CZ, DK, EE, FI, FR, DE, GR, HK, HU, IS, IN, ID, IE, IL, IT, JP, KR, LV, LT, LU, MY, NL, NZ, NO, PL, PT, SG, SK, ZA, ES, SE, CH, TW, TH, TR, GB, US, TT* * List of countries see appendix E Table A-34, page 312.
	2.4 GHz	Enabling or disabling the frequency band	Enabled, disabled
	5 GHz	Enabling or disabling the frequency band	Enabled, disabled

Table 9-1 Configuration values, telemetry

2. In the group "GSM" the user can enable or disable the GSM interface and enter the PIN of the mobile communications provider (see chapter 9.1.2 Configuration GSM modem, page 206).
3. In the group "GPRS" the user can enter the APN and, if intended by the mobile communications provider, enter the user name and password for login to the data net (see chapter 9.1.3 Configuration GPRS connection, page 207).
4. In the group "(W)LAN" the user can enable or disable the (W)LAN interface and select the regionally approved frequency bands via country code (list of countries see Appendix E Table A-34, page 312) or enable/disable individual frequency bands.

Note In some countries certain frequency bands are nor approved, therefore the user OPERATOR can disable the 2.4 GHz- and the 5 GHz frequency band individually. Operators are responsible for complying with restricted use regulations in their region/country.

9.1.1 Installing the SIM Card

For telemetry transmissions you need a SIM card and a PIN number from your mobile network service provider. The SIM card must be inserted in the SIM card slot on the rear side of the monitoring unit (see page 15, Fig. 3-6 Monitoring unit, rear view).

The PIN must be deposited in the telemetry settings in the group "GSM" (see chapter 9.1.2 Configuration GSM modem, page 206).

9.1.2 Configuration GSM modem

To configure the GSM modem, proceed as follows:

1. Select in the main menu "Telemetry" ► "Settings".
2. Enter the 4-digit PIN in the group "GSM" and confirm. The PIN is assigned by your mobile communication provider.
3. To confirm the settings and close the configuration dialogue, press the softkey [OK].
   To retain the previous settings and close the configuration dialogue, press the softkey [Cancel].

Note If in the group "GSM" the checkbox "Enabled" is not selected, the field "PIN" and the group "GPRS" are greyed out and cannot be edited.

Note The maximum length of the PIN is four digits. With SIM cards without PIN, the PIN code "0000" has to be entered.

Note If a wrong PIN has been entered and transmission has been attempted three times in a row, the SIM card will be locked. Fax transmission is then no longer possible. In that case, the SIM card can only be unlocked by inserting it into an external mobile phone and entering the PUK there.

Note Using a double SIM card (depending on your mobile communications provider also called twin SIM card, dual SIM or multi SIM card), is only possible if other user devices with the pertaining SIM cards are off. So it is not possible to operate several SIM cards of one mobile communications contract at the same time. The operator of the device has to make sure beforehand that the operation of the SIM card used in the corpuls3 cannot be interrupted.

Note As of software version 3.0, the former import-/export function for phonebook entries (= telemetry connections) via the SIM card is no longer supported. The import and export of telephone entries is only possible via the CF card.

Depending on the selected mobile provider and on the network configuration, there are different ways to enter the internet address or IP address (with or without "www"). Ask your corpuls.mission **LIVE** administrator for help.

9.1.3 Configuration GPRS connection

To configure the GPRS connection, proceed as follows:

1. Select in the main menu "Telemetry" ► "Settings".
2. Enter the APN (Access point name) in the group "GPRS" and confirm.
3. For the log-in to the data net via GPRS, enter the user (user name) and confirm.
4. Enter password and confirm.
5. To confirm the settings and close the configuration dialogue, press the softkey [OK]. To retain the previous settings and close the configuration dialogue, press the softkey [Cancel].

Note If in the group "GSM" the checkbox "Enabled" is not selected, the field "PIN" and the group "GPRS" are greyed out and cannot be edited.

Note The respective valid APN is assigned by your mobile communications provider.

Note The log-in with user name for access to the data service is only designated for a few mobile communication networks. For further information please contact your mobile communications provider.

Note In the corpuls3, all characters are in UTF-8 code.

9.1.4 WLAN interface configuration

To configure the WLAN interface, proceed as follows:

1. Select in the main menu "Telemetry" ► "Settings".
2. Select in the group "(W)LAN" the corresponding country code (List of countries see Appendix E Table A-34, page 312).
3. If necessary, disable the frequency band that is not approved for current use.
4. To confirm the settings and close the configuration dialogue, press the softkey [OK]. To retain the previous settings and close the configuration dialogue, press the softkey [Cancel].

Note In some countries certain frequency bands are nor approved, therefore the user OPERATOR can disable the 2.4 GHz- and the 5 GHz frequency band individually. Operators are responsible for complying with restricted use regulations in their region/country.

Note If **both** the 2.4 GHz- and the 5 GHz bands are disabled, a WLAN connection is **not** possible.

9.1.5 Saving telemetry connections (Phonebook)

Note The settings described in the following have to be saved in the system settings in the group "Configuration" in order to be available permanently.

1. Select in the main menu "Telemetry" ► "Connections". The configuration dialogue opens.

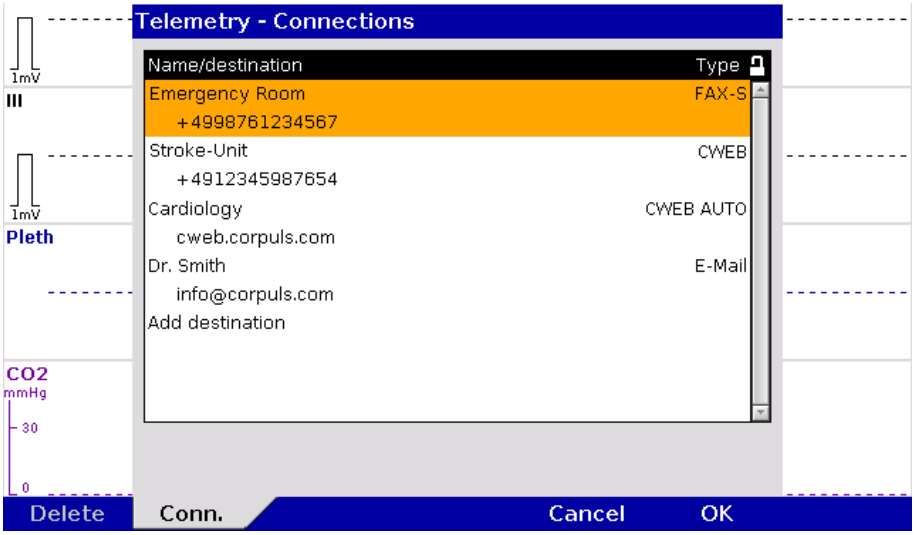

Fig. 9-2 Telemetry connections (Persons responsible for the device)

2. Select "Add destination" by pressing the jog dial.
3. Enter the recipient's name.
4. Enter the recipient type.
5. Enter the recipient's e-mail address, phone number, internet address or IP address.
6. Press softkey [Enter] to confirm.
7. To confirm the settings and close the configuration dialogue, press the softkey [OK]. To retain the previous settings and close the configuration dialogue, press the softkey [Cancel].

There are up to 50 memory locations available for saving telemetry connections.

Note If more than 20 new entries are created at once, saving will take longer.

Note In the corpuls3, all characters are in UTF-8 code.

There are 4 options for recipient type:

- **`FAX-S`**
- **`CWEB`**
- **`CWEB AUTO`**
- **`E-mail`**

9.1.6 Deleting Telemetry Connections (Persons responsible for the device)

Note The settings described in the following have to be saved in the system settings in the group "Configuration" in order to be available permanently.

1. Select in the main menu "Telemetry" ► "Connections". The configuration dialogue opens.
2. Select the entry to be deleted with the jog dial and press the softkey [Delete].The confirmation prompt **`Delete entry?`** appears.
   e) To delete the selected entry from the list, press softkey [Yes].
   The following entry is marked.
   f) To retain the previous settings and close the menu, press the softkey [No].

Note Deleting Bluetooth connections is performed analogously.

Exporting and importing the phonebook

The saved phonebook entries (= telemetry connections) are part of the configuration export, but can also be exported/imported separately for backup purposes or transfer to other corpuls3 devices via the CF card (see chapter 7.4.2 General System Settings (Person responsible for the device), page 175).

Note As of software version 3.0, the former import-/export function for phonebook entries (= telemetry connections) via the SIM card is no longer supported. The import and export of telephone entries is only possible via the CF card.

9.2 Configuration of Telemetry Services (Persons Responsible for the Device)

1. Select in the main menu "Telemetry" ► "Services". The configuration dialogue opens.

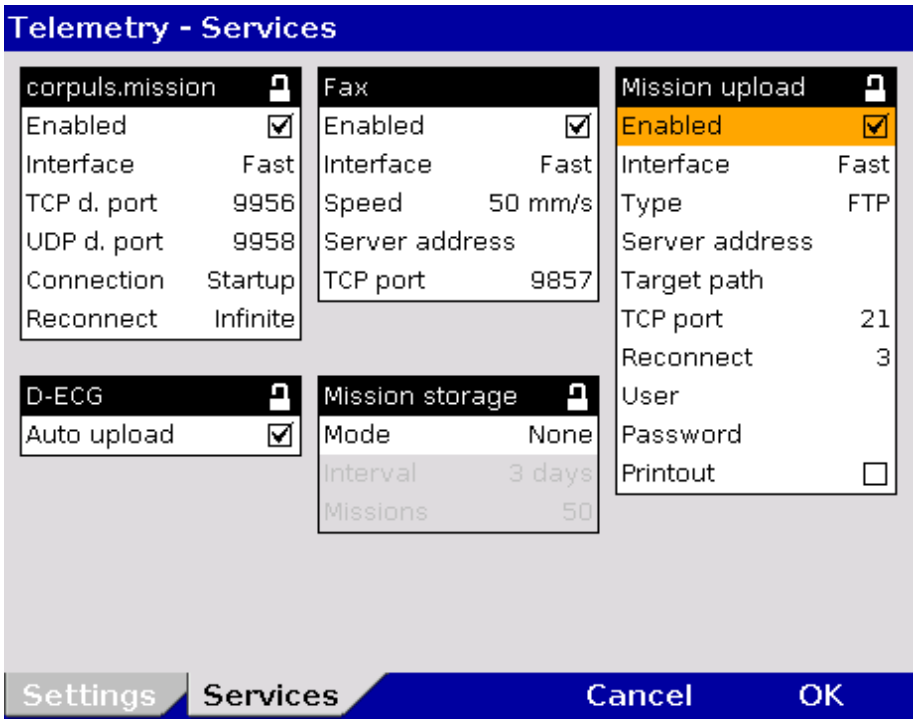

Fig. 9-3 Configuration of Telemetry Services

Table 9-2 shows the possible values:

Group	Field	Setting	Value
corpuls. mission	Enabled	Connection with the corpuls.mission **LIVE** server	Enabled; disabled
	Interface	Interface by means of which the connection to the server is established	Fast, GSM, (W)LAN, G,(W)L, (W)L,G
	TCP d. port	Network protocol	9956 Numbers from 0-9
	UDP d. port	Network protocol	9958 Numbers from 0-9
	Connection	Procedure when the connection to the server is initiated	Manual, Startup
	Reconnect	Number of repeated attempts to establish connection	Off; 3; 5; 10; Infinite
D-ECG	Auto upload	Automated sending of a D-ECG to the CWEB AUTO Address in the phonebook	Enabled; disabled

Group	Field	Setting	Value
Fax	Enabled	Sending a D-ECG via fax	Enabled; disabled
	Interface	Interface by means of which the connection to the server is established	Fast, GSM, (W)LAN, G,(W)L, (W)L,G
	Speed	D-ECG speed at fax transmission	25 mm/s, 50 mm/s
	Server address	Network address of the server	Numbers, symbols and letters
	TCP port	Network protocol	Numbers from 0-9
Mission upload	Enabled	Automatic upload of missions from the CF card to a server	Enabled; disabled
	Interface	Interface by means of which the connection to the server is established	Fast, GSM, (W)LAN, G,(W)L, (W)L,G
	Type	FTP upload options	FTP, FTPiS, FTPeS
	Server address	Network address of the server	Numbers, symbols and letters
	Target path	Directory path for uploading	Numbers, symbols and letters
	TCP port	Network protocol	Numbers from 0-9
	Reconnect	Number of repeated attempts to establish connection	Off; 3; 5; 10
	User	User name	Numbers, symbols and letters
	Password	Authentication (user-definable combination)	Numbers, symbols and letters
	Printout	Enabling/disabling of the mission upload protocol printout	Enabled; disabled
Mission storage	Mode	Storing a certain number of missions or for a period of time	None, Count, Time
	Interval	Period of time for which the missions should remain on the CF card	1, 2, 3, 4, 5, 6, 7 days
	Missions	Number of missions that should remain on the CF card	10, 25, 50, 100, 150, 200

Table 9-2 Configuration of Telemetry Services

Connection to corpuls.mission LIVE server

In the group "corpuls.mission" the connection to the corpuls.mission **LIVE** server can be activated and configured (see chapter 9.2.1 Configuring a connection to corpuls.mission LIVE, page 211).

Automatic Upload of D-ECG

If in the group "D-ECG" the checkbox "Auto upload" is ticked and a connection is established, the recorded D-ECG is automatically sent to a corpuls.mission **LIVE** server after the measurement is finished. If no connection to a corpuls.mission **LIVE** server exist, the entry with "CWEB AUTO" in the connection list is automatically used to transfer the ECG there (ad hoc transmission without permanent connection). If no entry with "CWEB AUTO" exists in the connection list, no automated upload occurs.

It is not necessary to press the softkey [Send] as well.

Note The option "Auto upload" does only work with connections to corpuls.mission **LIVE**.

Fax configuration

In the group "Fax" the sweep speed for the D-ECG and the connection to the fax server can be configured (see chapter 9.4.2 Sending a D-ECG, page 216)

Note For information on the network address of the fax server contact your system administrator or fax server administrator.

Configuration Mission upload

The user OPERATOR can configure that recorded missions are uploaded automatically to an FTP server (e.g. a corpuls.manager **ANALYSE** server) when the device is switched off (see chapter 9.2.3 Configuration of mission upload, page 212). The following FTP upload options are available: FTP (unencrypted, standard port 21), FTPeS (explicit FTP, encrypted, standard port 21) and FTPiS (implicit FTP, encrypted, standard port 990).

Note The login data (user name and password) for access to the FTP server will be assigned by the respective system administrator.

Note The login data (user name and password) for access to the FTP server will be assigned by the respective system administrator.

Security Risk Incorrect login data to the FTP server might lead to data loss or unauthorised access. To reduce the risk, the user OPERATOR should regularly check whether the phone book of the corpuls3 is up-to-date with correct login data.

Privacy Risk As the FTP protocol has no encryption and therefore all data are transferred in plain text, it should be used only in secured networks. To further ensure that no data can be read and analysed it is strongly recommended to use FTPiS or FTPeS instead.

Security Risk Do not use the same login data for FTP servers and FTPiS/FTPeS servers. If the same login data are used, disclosed login data from a compromised FTP server can be used to access the secure FTPiS/FTPeS server.

Note In the corpuls3, all characters are in UTF-8 code.

9.2.1 Configuring a connection to corpuls.mission LIVE

1. Select in the main menu "Telemetry" ► "Services".
2. If necessary, select checkbox "Enabled" to activate the service.
3. In the field "Interface" select how the connection to the serve should be established.
   a) Fast: the interface that has established a connection to the server first will be used.
   b) GSM: the connection is established via GSM interface.
   c) (W)LAN: the connection is established via WLAN interface.
   d) G, (W)L: first the connection is attempted via GSM, then via (W)LAN.
   e) G, (W)L: first the connection is attempted via (W)LAN, then via GSM.
4. The standard TCP port is 9956, if necessary, enter different data and confirm.
5. The standard UDP port is 9958, if necessary, enter different data and confirm.
6. To configure the method of establishing a connection:
   a) Select in the field "Connection" "Manual", to start the connection manually via the main menu.
   b) If the connection should be established automatically while the corpuls3 is booting, select in the field "Connection" "Startup". For this setting, a "CWEB Auto"-phonebook entry has to be created beforehand, in which the IP address of the respective corpuls.mission **LIVE** server is entered (see chapter 9.1.5 Saving telemetry connections (Phonebook), page 207).
7. Select the settings and confirm.
8. In the field "Reconnect" can be determined if and how often the corpuls3 should automatically reconnect if the connection has been broken (e. g. if the GSM network is not available). Select the required setting and confirm.

Note For information on the network address of the corpuls.mission **LIVE** server contact your system administrator or corpuls.mission **LIVE** server administrator.

Automatic Upload of D-ECG If in the group "D-ECG" the checkbox "Auto upload" is ticked and a connection is established, the recorded D-ECG is automatically sent to a corpuls.mission **LIVE** server by pressing the softkey [Print]. It is not necessary to press the softkey [Send] as well.

Note The option "Auto upload" does only work with connections to corpuls.mission **LIVE**.

9.2.2 Configuration of fax transmission

Fax configuration

In the group "Fax" the following fields can be configured for the D-ECG and the connection to the fax server:

1. Select the sweep speed for the D-ECG transmission (25 mm/s or 50 mm/s) and confirm. The user DEFAULT can change the speed settings during the mission.
2. The network address of the server gateway.corpulsmission.com is set by default. If another server should be used, enter the IP address or domain and confirm.
3. Enter TCP port 9857 and confirm. Other possible ports can be found at https://fax.corpulsweb.com/.

9.2.3 Configuration of mission upload

1. In the group "Mission upload" select the checkbox "Enabled".
2. Enter the server address and confirm.
3. Enter the target path and confirm.
4. Enter TCP port and confirm.
5. In the field "Reconnect" can be determined if and how often the corpuls3 should automatically reconnect if the connection could not be established or has been broken. Select the required setting and confirm.
6. For the log-in to the FTP server enter the assigned login data and confirm.
7. With the checkbox "Printout" the printout of the mission upload protocol can be enabled or disabled. If the checkbox is selected, there is always a printout. If the checkbox is deselected, there is only a printout if the transmission has failed.
8. With the option "Mission storage", the user OPERATOR can configure how long the missions or how many missions should remain on the CF card when the corpuls3 is switched off.

Note The login data (user name and password) for access to the FTP server will be assigned by the respective system administrator.

Note For information on the network address of the FTP server contact your system administrator or FTP server administrator.

Note With REL-4.1.0 the formerly unencrypted channel for mission upload can now be encrypted.

The following 3 FTP upload options are available:

- FTP (unencrypted, standard port 21)
- FTPeS (explicit FTP, encrypted, standard port 21)
- FTPiS (implicit FTP, encrypted, standard port 990)

The TCP ports can be configured freely in the corpuls3, standard ports see Appendix D Reset to factory settings, page 291.

Note If too many missions remain on the CF card and the device stores new missions, the CF card may overflow (alarm messages "CF card almost `full`" or "CF card `full`").

Note In the corpuls3, all characters are in UTF-8 code.

9.3 Configuration of (W)LAN networks (Persons Responsible for the Device)

Configuration of (W)LAN networks

To configure a (W)LAN network, proceed as follows:

1. Select in the main menu "Telemetry" ► "Networks". The configuration dialogue opens.

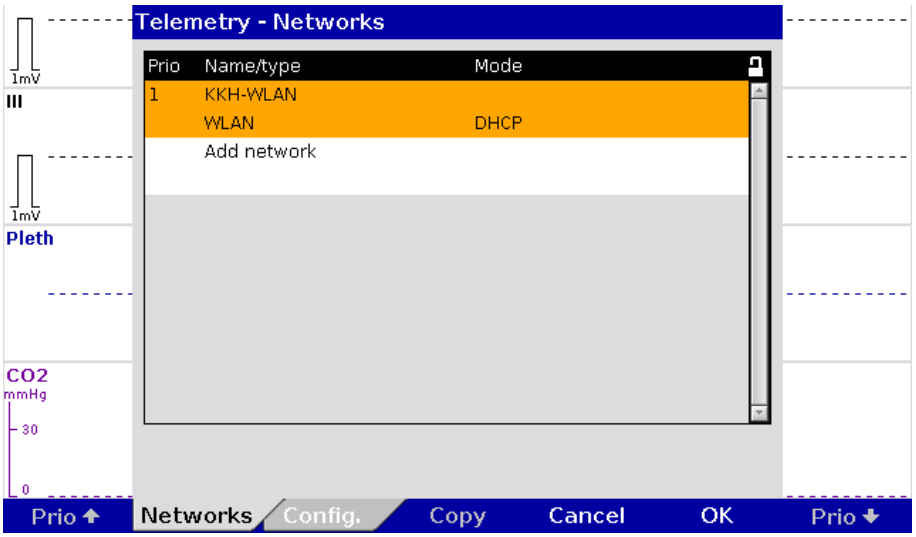

Fig. 9-4 Add network

2. Select "Add network" by pressing the jog dial. The configuration dialogue opens.

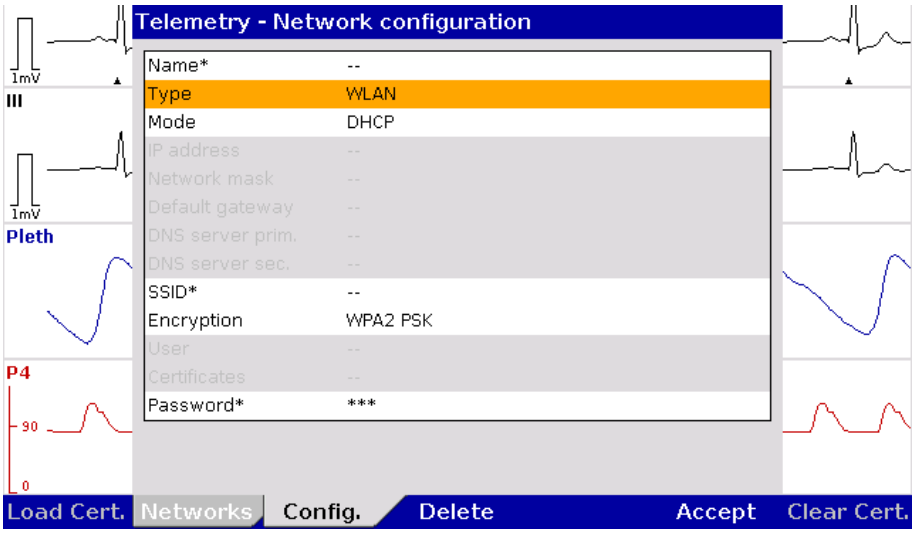

Fig. 9-5 Configuring a network

3. Enter a name for the network.
4. Select the network type.

Note It is possible to configure up to 4 WLAN networks, but only 1 LAN network.

5. Select mode.
   a) With the option "DHCP", an IP address is assigned automatically to the corpuls3. Proceed with step 6.
   b) With the option "Manual", the formerly greyed-out fields are now displayed and can be edited (see chapter 9.3.1 Manual network settings, page 214).
6. Enter the SSID* (Service Set Identifier = in general the name of the router).
7. Select encryption type.

Note Prerequisites for the encryption type WPA2 EAP-TLS: There are certificates saved on the CF card (see also chapter 9.3.2 Uploading Certificates, page 214). Access data will be provided when commissioning the device.

8. To upload certificates in the corpuls3, press softkey [Load Cert.].
9. Enter the username.
10. Enter password.
11. To save, press softkey [Accept]. To delete data, press softkey [Delete].

Note To delete certificates, press softkey [Clear Cert.].

Security Risk If certificates for WLAN Enterprise are not properly deleted from the CF card after installation, they can be used to gain illegal access to wireless networks with other devices. Check after installation if the certificates have been properly deleted from the CF card.

Note Already configured WLAN networks can be copied with the softkey [Copy] (see Fig. 9-4) and then adapted to save time with the configuration.

Note With the softkey [Prio], a priority can be assigned to the configured WLAN network. The corpuls3 tries first to establish a connection with the priority-1 network, then with the priority-2 network, and so on.

9.3.1 Manual network settings

To configure the network manually, proceed as follows:

1. Perform step 1-5b of chapter 9.3.
2. Enter an IP address in the field "IP address" and confirm.
3. Enter an IP address in the field "Network mask" and confirm.
4. Enter an IP address in the field "Default gateway" and confirm.
5. Enter an IP address in the field "DNS server prim." (primary DNS server) and confirm.
6. If available, enter an IP address in the field "DNS server sec." (secondary DNS server) and confirm.

Note It is possible to configure up to 4 WLAN networks, but only 1 LAN network.

9.3.2 Uploading Certificates (Persons Responsible for the Device)

As of version 4.1.0, the Operator can select the encryption type WPA2 EAP-TLS.

To upload certificates for that, proceed as follows:

1. Insert the CF card from the corpuls3 into a card reader device and connect to a PC.
2. Deposit the certificate files (ca.pem, user.pem, user.prv or ca.pem, user.p12) in the folder "certificates" on the CF card.
3. Re-insert the CF card into the corpuls3.
4. Perform the instructions of chapter 9.3 from step 7.

Note It is mandatory to keep the nomenclature of the file endings (e.g. ca.pem, user.prv or user.p12).

9.4 Data transmission options

The corpuls3 offers the following possibilities for transmitting data via telemetry:

- Live data transmission to corpuls.mission **LIVE**
- D-ECG transmission
- Mission upload to an FTP server (see chapter 9.4.3 Manually uploading missions to an FTP server, page 217)
- Data transmission to external systems via Bluetooth® data interface (option)

- Receiving webMessages

D-ECG transmission

The corpuls3 can send a complete report of a 12-lead ECG recording (diagnostic ECG) to a fax server, an e-mail address or to the corpuls.mission **LIVE** server via the optionally available modem or the W/LAN interface.

Note

The corpuls3 has an offline mode. This mode disables all external connection technologies (WLAN, LAN, GSM, Bluetooth) at once. The airplane symbol indicates that the offline mode is active.

Live data transmission

Via the modem (option) or the WLAN/LAN interface (option) the corpuls3 can send the following date live, in real time, to a data server:

- Patient- and master data,
- Curves and vital parameters,
- D-ECGs and events,
- Trends.

By means of the software application corpuls.mission **LIVE** (option), the server can be accessed from any place via internet and the data can be viewed live.

Server connection



If the corpuls3 is connected to a server, the symbol "Server connection" is displayed in the status-/alarm line.

Bluetooth® connection



If a connection via the Bluetooth® data interface is established to external systems (as e. g. a Tablet-PC for documentation) the symbol "Bluetooth® connection“ is displayed in the status-/alarm line.

Depending on the status there are additional markings of the above described symbols for telemetry connections. A detailed description can be found in Appendix A Symbols, page 282.

Note

Information regarding data protection can be found in Appendix N Note on Data Protection, page 342.

Note

Saving changes to the basic configuration permanently is reserved to the person responsible for the device (see chapter 7.4.2 General System Settings (Person responsible for the device), page 175).

The representation of the curves (sweep speed) for fax transmission of the D-ECG can be set in the telemetry services settings at 25 mm/s or 50 mm/s (Only for Fax-G).

9.4.1 Live data transmission to corpuls.mission LIVE

Mobile network connection



WLAN connection

LAN connection

To carry out a live data transmission, proceed as follows:

1. Check if the symbol "Mobile network connection" is displayed in the status-/alarm line. If not, establish a connection manually (see chapter 9.4.4 Manually Establishing a Connection to the Mobile Network, page 218).

2. If the device is connected via a W/LAN interface instead, check if the symbol "WLAN connection" or "LAN connection (IP address assigned)" is displayed in the status-/alarm line. To configure the W/LAN interface, see chapter 9.1.4 WLAN interface configuration, page 207.

Server connection



3. Check if the data connection between the corpuls.mission **LIVE** server and the corpuls3 is already established and the symbol "Server connection" is displayed permanently.

Now all data shown on the display of the corpuls3 are transferred live.

4. To abort the current live data transmission select "Telemetry" ► "Disconnect" in the main menu.

During the live data transmission all therapeutic and monitoring functions of the corpuls3 can be used without limitations. The observer of the live data using corpuls.mission **LIVE** can see the same parameters and curves that are currently displayed on the connected corpuls3.

Live transmission of D-ECGs

If the user of the corpuls3 records a D-ECG, it is transferred live to the server and can immediately be reviewed via corpuls.mission **LIVE**. The user of corpuls.mission **LIVE** receives a notification in case of an incoming D-ECG.

Transfer of trend data base

The corpuls3 allows to transfer the complete trend data base to corpuls.mission **LIVE**. So, the consulting doctor using corpuls.mission **LIVE** can review the whole development and gain an overview of the patient`s status.

If the connection could not be established or if the live data transmission was aborted, this is being signaled via diverse symbols and alarms in the status-/alarm line.

The protocol records status messages of the live data transmission as event. For a list of possible events see chapter 11.3 Notifications Message Line and Information in the Protocol, page 268. In case of malfunctions see also chapter 11.2 Troubleshooting and Corrective Actions, page 257 and Appendix A Symbols, page 282.

Note Depending on the settings on the corpuls.mission **LIVE** server, the system time set on the corpuls3 is synchronised by the corpuls.mission **LIVE** server before the transmission of mission data. The time change is logged in the mission protocol of the corpuls3.

Note If the connection is interrupted during data transmission, the D-ECG may nevertheless have been transferred completely. The accuracy of the transferred data is guaranteed in this case as well.

Note Via the mission browser, D-ECGs from the current mission can be sent again, see chapter 8.5.2 Mission Browser, page 200.

9.4.2 Sending a D-ECG

Prerequisite: The CF card is inserted.

1. Activate the preview of the D-ECG in monitoring mode and start recording (see chapter 6.4.3 Recording and Measuring a Diagnostic ECG, page 118).

Note Before sending the D-ECG, the patient data should be entered so that the D-ECGs received can be clearly assigned to the patient treated.

2. After the message "`D-ECG measured`" is displayed, press the softkey [Send].

The phonebook (= telemetry connections) appears.

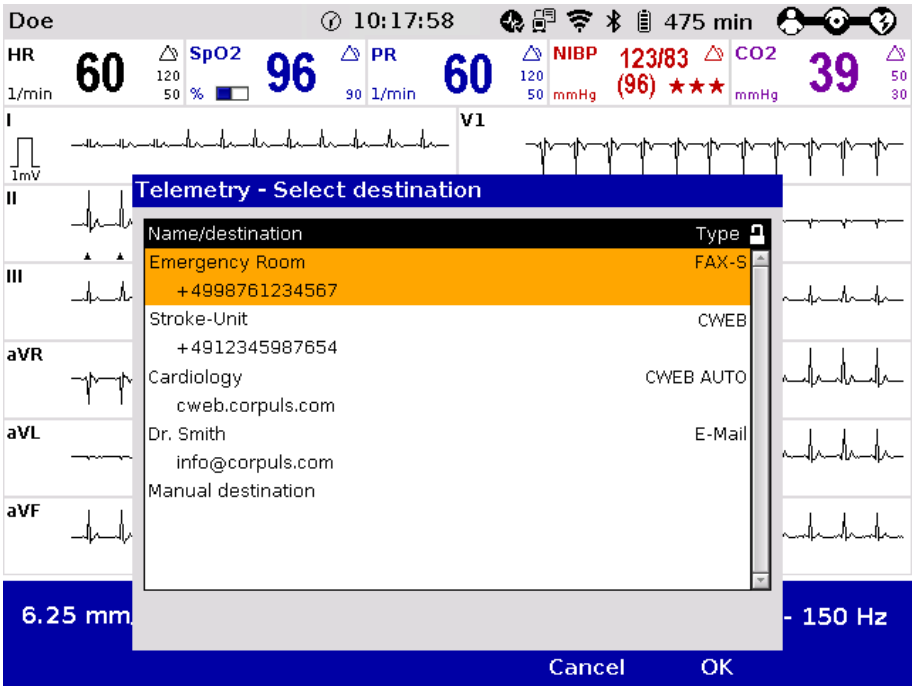

Fig. 9-6 Phonebook (= telemetry connections)

3. The destination can be entered in two ways:
   a) Select a pre-configured destination with the jog dial and confirm by pressing the jog dial, or
   a) Select the entry "Manual destination" and enter the data manually with the jog dial and confirm by pressing the softkey [Enter].

Note In the corpuls3, all characters are in UTF-8 code.



While the data connection is being established, the symbol "Connect" is flashing.



While the D-ECG transmission is running, the symbol "D-ECG transmission" is flashing in the status-/alarm line.

By pressing the softkey [Cancel] the monitoring mode for patient monitoring can be called up again. The ECG transmission is carried out in the background.



If the ECG transmission has been finished successfully, this is indicated by the confirmation tick on the symbol.



Caution

Risk of inadequate therapy

If a D-ECG recording is started without an inserted CF card or with a full/defective CF card, the alarm message "CF card `missing`" and the message "`CF card currently not available`" appear and the softkey [Send] is greyed out. Sending the D-ECG is not possible, because no connection to the server can be established.

D-ECG transmission failed

If the D-ECG transmission is interrupted for technical reasons (e. g. insufficient reception quality or interruption of the radio connection) the alarm message "D-ECG transmission `error`" is displayed. In case of malfunctions see also chapter 11.2 Troubleshooting and Corrective Actions, page 257, and Appendix A Symbols, page 282.



Note Via the mission browser, D-ECGs from the current mission can be sent again, see chapter 8.5.2 Mission Browser, page 200.

9.4.3 Manually uploading missions to an FTP server

Uploading missions to a server

If feature is configured (see chapter 9.2.3 Configuration of mission upload, page 212), the upload of recorded missions to an FTP server can be started manually:

1. Select in the main menu "Telemetry" ► "Mission upload".
   The confirmation prompt "`Upload missions?`" appears.



Fig. 9-7 Confirmation prompt for mission upload

The following FTP upload options are available: FTP (unencrypted, standard port 21), FTPeS (explicit FTP, encrypted, standard port 21) and FTPiS (implicit FTP, encrypted, standard port 990).

2. If the recorded missions are to be uploaded to an FTP server and the current mission finished, press softkey [OK];
   If the current mission should be continued, press softkey [Cancel].
3. The upload screen appears, indicating the progress of the upload, e.g. "`Uploading mission [NUMBER] of [NUMBER]`" (see also chapter 4.2.2 Switching off, page 49).
4. When all missions have been uploaded successfully, a "MISSION UPLOAD `PROTOCOL`" is printed, indicating the time and date of the upload, the connection data (FTP Server, TCP port, User, FTP Path), reconnection settings, status of the upload, the termination criteria (if applicable) and the mission numbers of the uploaded missions.

5. With the checkbox "Printout" the printout of the mission upload protocol can be enabled or disabled. If the checkbox is selected, there is always a printout. If the checkbox is deselected, there is only a printout if the transmission has failed.
6. The device switches off.

Note Missions that have been uploaded successfully will be deleted from the CF card.

Note If the mission upload is interrupted, before all missions are transferred completely, the upload is resumed at a later point in time.

Note The exact procedure of the automatic mission upload is described in chapter 4.2.2 Switching off, page 49.

9.4.4 Manually Establishing a Connection to the Mobile Network

Symbol Mobile network connection

If the modem has sufficient reception intensity, this is indicated by the symbol "Mobile network connection" in the status-/alarm line of the corpuls3.



Establishing a connection manually

If the telemetry services are not configured to connect automatically when the corpuls3 is switched on (see chapter 9.2.1 Configuring a connection to corpuls.mission LIVE, page 211), the connection can be established manually:

1. Select in the main menu "Telemetry" ► "Connect".
2. While the connection is being established, the symbol "Mobile network connection" is flashing in the status line.
3. When the symbol "Mobile network connection" is displayed permanently, the mobile network connection is established.



Depending on which transmission mode is selected, different symbols will appear in the status line next to the symbol "Mobile network connection" (see Appendix A Symbols, page 282).

Note The duration of establishing a connection may vary according to network quality.

Note Under certain conditions data transmission may be interrupted due to low signal strength of the mobile communications network.

Note In areas near national borders the mobile communications networks may overlap, so it may be necessary to enter the international area code as well to be able to contact the recipient. In this case, adapt to your country-specific settings (e.g. "+49 9876 54321" or "0049 9876 54321").

Note At locations where radio signals are shadowed for technical reasons (e.g. inside a flat), low signal levels may occur in mobile phone reception. In this case, select a better position for the monitoring unit, e.g. near a window.

9.5 Bluetooth

Bluetooth® data interface (option)

The corpuls3 can wirelessly import and export data via the optional Bluetooth® data interface (P/N 04211). For example, with the radio module in the patient box process data of a corpuls3 mission can be transferred to external documentation systems (e. g. a tablet PC, ePCR systems) but data can also be received from other systems (e. g. a ventilator, corpuls cpr).

Mode "Discovery" To have the the corpuls3 send its identification via Bluetooth, select in the main menu "Bluetooth" ► "Discovery".

9.5.1 Configuring a Bluetooth® data interface (Persons Responsible for the Device)

Bluetooth® data interface

Persons responsible for the device can set the following configurations:

- Activation of the Bluetooth® data interface (option)
- Configuration of the device PIN (option)
- Configuration of the data protection PIN
- Data management (Transferring/deleting mission data, editing patient- and master data, formatting the CF card)

Activating the data interface

To establish a radio connection with external devices, the device PIN has to be configured and the Bluetooth® data interface has to be activated.

Bluetooth® Settings

1. Select in the main menu "Bluetooth" ► "Settings". The configuration dialogue opens.

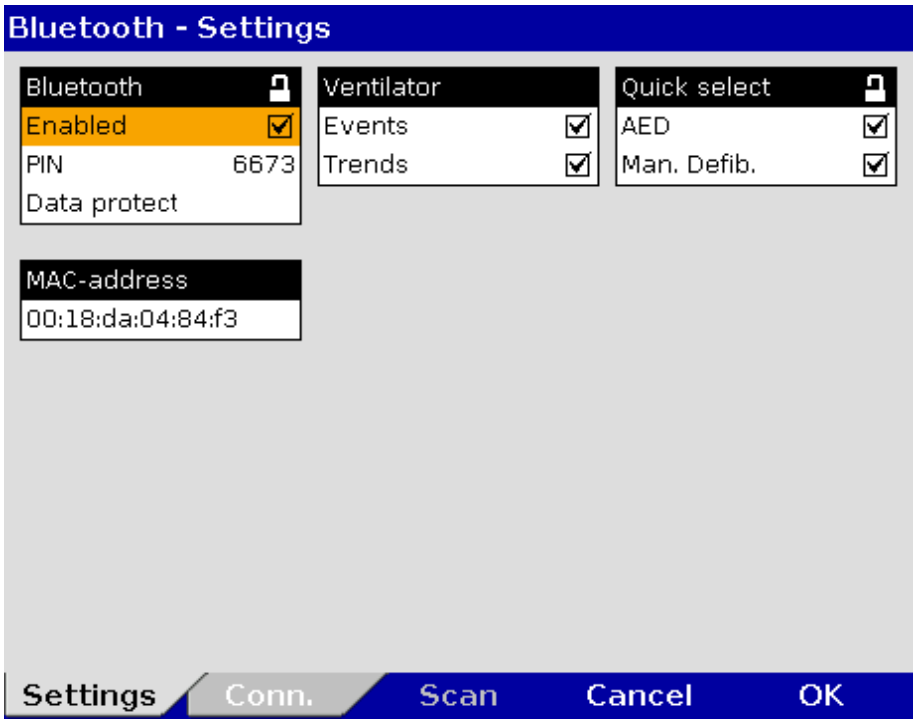

Fig. 9-8 Bluetooth settings (Persons Responsible for the Device)

2. To activate the Bluetooth data interface, select the checkbox "Enabled".
3. Configure the device PIN.

Note

If the default PIN is changed by the user OPERATOR, the new PIN must be made known to the user.

4. To configure the data protection PIN, enter a 4-digit number.

Table 9-3 shows the possible values:

Group	Field	Setting	Values
Bluetooth	Enabled	Enabling or disabling Bluetooth® data interface	Enabled, disabled
	PIN	Device PIN for connections with other Bluetooth® devices.	Numbers from 0-9
	Data protect	Further user-defined PIN that grants access to modify mission data via Bluetooth.	Numbers from 0-9

Group	Field	Setting	Values
MAC address	--	The MAC address is the unambiguous identification number of the corpuls3 that has to be used to connect the corpuls3 to other Bluetooth® devices.	Fixed
Ventilator	Events	Data that can be printed out via a Bluetooth connection on the printer of the corpuls3.	Enabled, disabled
	Trends		Enabled, disabled
Quick select	AED	Allows to enable or disable the softkey [Connect] in defibrillator mode AED or Man. Defib..	Enabled, disabled
	Man. Defib.		Enabled, disabled

Table 9-3 Values for Bluetooth® configuration

Data protection PIN To be granted access to modify mission data on the CF card (see chapter 9.5.5 Data management via Bluetooth®, page 222), another four-digit data protection-PIN has to be configured beforehand by the user OPERATOR.

MAC address The MAC address is the hardware address of the Bluetooth module and serves as identification of the device in a network. The MAC address cannot be changed.

Ventilator In case of a connection to a ventilator (e.g. Weinmann MEDUMAT Transport), the corpuls3 can, according to configuration, print out the events and trends received from the ventilator and save them on the CF card. The stored data can be evaluated with the software corpuls.manager **REVIEW** (see chapter 8.6 Analysis of the Data with corpuls.manager REVIEW, page 201).

Quick select Allows to enable or disable the softkey [Connect] in defibrillator mode AED or Man. Defib.. If the option is disabled, the softkey [Connect] is not visible and the Bluetooth connection to a corpuls cpr can be established only via the main menu.

Note If a Bluetooth connection to a corpuls cpr already exists, the softkey [Connect] is greyed out.

9.5.2 Configuring Bluetooth® connections

Bluetooth®-connections

1. Select in the main menu "Bluetooth" ► "Connections". The configuration dialogue opens.

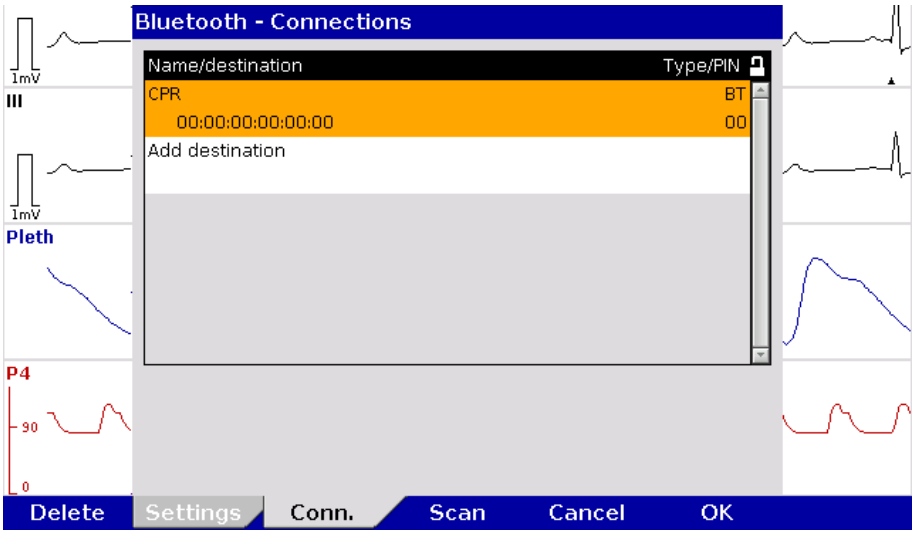

Fig. 9-9 Bluetooth connections (persons responsible for the device)

2. Select "Add destination" by pressing the jog dial.
3. Enter device name.
4. Enter MAC address of the device to be connected (can be requested from the manufacturer).

5. Enter the device PIN of the device to be connected (can be requested from the manufacturer).
6. Press softkey [Enter] to confirm.
7. To confirm the settings and close the configuration dialogue, press the softkey [OK]. To abort data entry and close the configuration dialogue, press softkey [Cancel].

A maximum of 20 Bluetooth connections can be saved.

Connection authorisation (Pairing)

If the Bluetooth® data interface is activated, the corpuls3 can receive automatically an connection authorisation for a connection with an external documentation system, if this system has the same PIN. This procedure is also called "Pairing".

With the softkey [Scan], the user can search for corpuls devices that are in discovery mode.

9.5.3 Deleting Bluetooth Connections (Persons Responsible for the Device)

Note

The settings described in the following have to be saved in the system settings in the group "Configuration" in order to be available permanently.

1. Select in the main menu "Bluetooth" ► "Connections".The configuration dialogue opens.
2. Select the entry to be deleted with the jog dial and press the softkey [Delete].The confirmation prompt `Delete entry?` appears.
   a) To delete the selected entry from the list, press softkey [Yes].
   The entry is deleted and the following entry is marked.
   b) To retain the previous settings and close the menu, press the softkey [No].
3. To close the configuration dialogue, press the softkey [OK].

9.5.4 Establishing and interrupting a Bluetooth® connection

Establishing a Bluetooth® connection

To establish a Bluetooth® connection, proceed as follows:

1. Select in the main menu "Bluetooth" ► "Connect". The overview of pre-configured Bluetooth® connections opens.

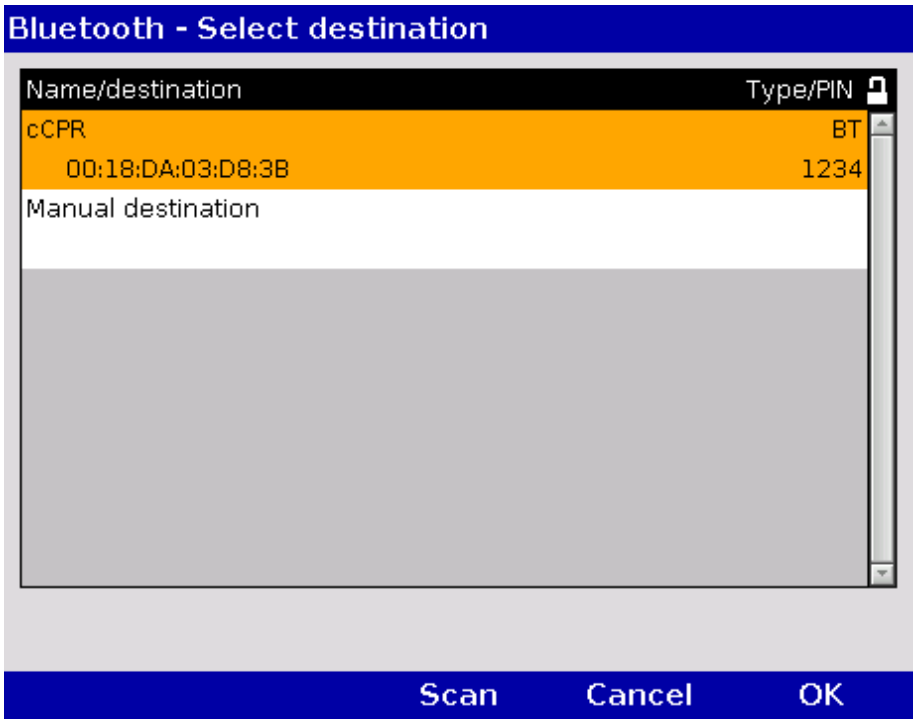

Fig. 9-10 Bluetooth connections

Symbol Bluetooth® Data interface



2. Select the device to be connected with the jog dial and confirm by pressing the jog dial.
3. To search for devices:
   a) Press softkey [Scan].
   The window shows the message "`Scanning...`". If there are devices in the vicinity in discovery mode, these are listed.
   b) Select the device to be connected with the jog dial and confirm by pressing the jog dial.
   If the connection cannot be established with the default PIN, the corpuls3 shows an entry dialogue. Proceed with step 6.
4. To enter a manual destination, select with the jog dial "Manual destination".
5. Enter the name and the device ID of the device to be connected (can be requested from the manufacturer or be read out via NFC chip).
6. Enter the device PIN of the device to be connected and confirm.

Note If the entry window for the PIN does not appear after a failed connection attempt with the default PIN, the PIN has to be changed manually in the connection list (see chapter 9.5.2 Configuring Bluetooth® connections, page 220). Establish a new connection.

Note A Bluetooth connection to several corpuls cpr devices is not possible.



The message "`BT connected: [DEVICE]`" appears and the symbol for "Bluetooth® connection" is displayed in the status-/alarm line.

Depending on the status there are additional markings of the above described symbols for telemetry connections. A detailed description can be found in Appendix A Symbols, page 282.

Bluetooth® connection failed



If the Bluetooth® connection is interrupted for technical reasons (e. g. insufficient reception quality or interruption of the radio connection) the message "`BT connection failed`" is displayed. In case of malfunctions see also chapter 11.2 Troubleshooting and Corrective Actions, page 257 and Appendix A Symbols, page 282.

Interrupting a Bluetooth® connection

1. To abort the current Bluetooth® connection, select in the main menu "Bluetooth" ► "Disconnect". If several devices are connected, a configuration dialogue with a list of devices appears. The device that should be disconnected can be selected.
2. The message "`BT disconnected: [DEVICE]`" is displayed.

The protocol records status messages of the Bluetooth® connection as event. For a list of possible events see chapter 11.3 Notifications Message Line and Information in the Protocol, page 268.

9.5.5 Data management via Bluetooth®

The following actions can be performed via password-protected Bluetooth commands:

- Transferring or deleting mission data from the CF card
- Editing patient- and master data
- Time synchronisation
- Calling up longterm ECGs pertaining to an event
- Formatting the CF card

For example, to edit the above mentioned data from an ePCR device, the user has to enter the data protection PIN which was configured beforehand (see chapter 9.5.1 Configuring a Bluetooth® data interface (Persons Responsible for the Device), page 219).

Note Only the following master data can be edited: Transport type, Radio ID, Location, Callback phone and Medical team.

9.5.6 Bluetooth connection with corpuls cpr

The corpuls3 can connect with the corpuls cpr via Bluetooth. So, common missions can be evaluated retrospectively with corpuls.manager **REVIEW**.

To establish a connection with a corpuls cpr manually, see chapter 9.5.4 Establishing and interrupting a Bluetooth® connection, page 221. From the moment of the Bluetooth connection, the mission data of the corpuls cpr are transferred to the corpuls3 and stored on the CF card. The data are uploaded together with the corpuls3 mission at the mission upload. The currently set parameter values can be displayed in the parameter fields of the corpuls3 (see chapter 7.1.2 Configuration, page 156).

With the softkey [Connect] the user can establish the Bluetooth connection directly in defibrillator mode. This feature can be enabled by the operator.

9.6 Offline mode

The corpuls3 has an offline mode. This mode disables all external connection technologies (WLAN, LAN, GSM, Bluetooth) at once.

To enable the offline mode, proceed as follows:

1. Select in the main menu "Telemetry" ► "Offline mode".
   The airplane symbol in the status-/alarm line indicates that the offline mode is active.
2. To disable the offline mode, select in the main menu "Telemetry" ► "Offline mode".
   All connection technologies are enabled again.

Apart from the offline mode, it is possible to disable data interfaces individually.

9.7 webMessage

The webMessage function allows unidirectional communication between corpuls.mission **LIVE** and corpuls3. The user of corpuls.mission **LIVE** can send a message to the medical personnel using the corpuls3 (teleconsultation). The corpuls3 can display and print the received messages. The respective status of the message (received/read/printed) is reported back to corpuls.mission **LIVE**.

Incoming webMessages are displayed as low-priority alarms in the alarm-/status line. The message **`New webMessage No. [NUMBER] received`** appears in the message line.

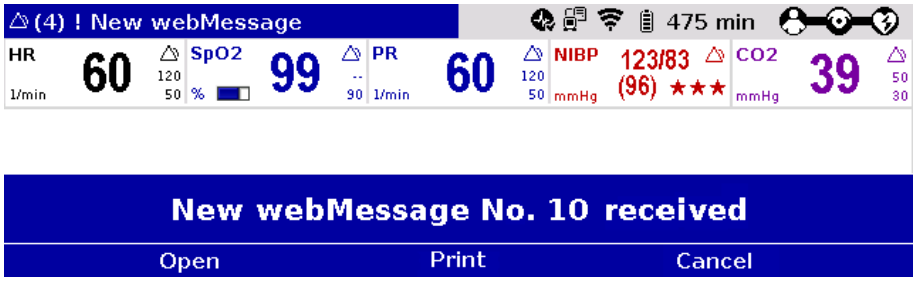

Fig. 9-11 Incoming webMessage

The webMessage can be opened immediately with the softkey [Open] or later via the main menu "Printer" ► "webMessage".

If there are several webMessages in the In-box, these can be paged through with the softkeys [◄] or [►].

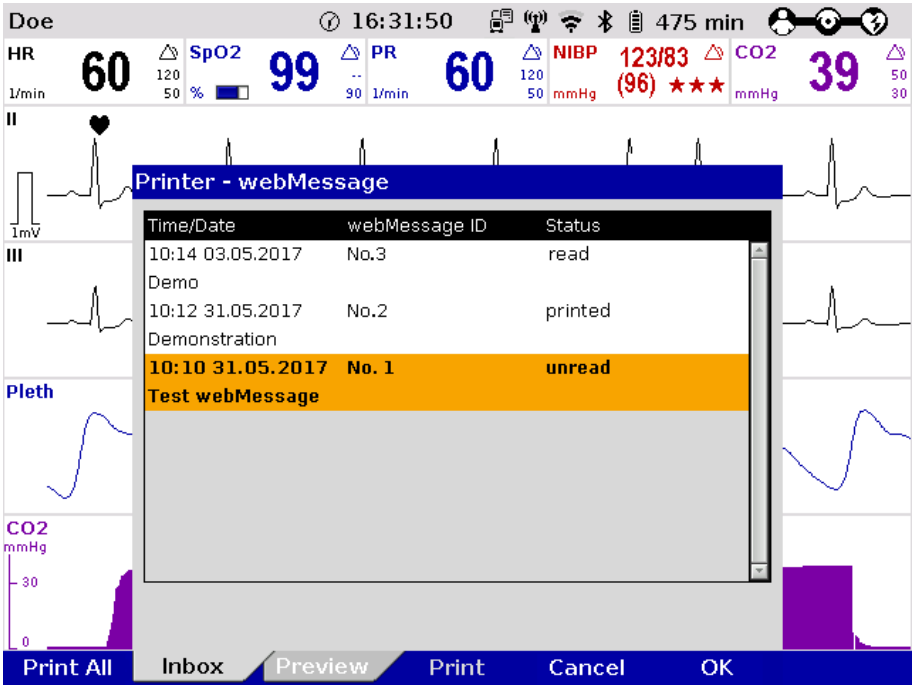

Fig. 9-12 Printing a webMessage

Printing a webMessage

The received webMessages can be printed out on the integrated printer, either individually with the softkey [Print] or all at once with the softkey [Print All].

For further information on printout configuration see chapter 7.1.3 Printer settings, page 160.

The printout can be stopped with the **Print** key.

Note

When starting a new mission (e.g. after restarting the device), all received webMessages of the former mission are deleted.

Caution

Loss of important information!

If a new webMessage is ignored by clicking on the softkey [Cancel], important information may not be available.

Call up the content of the message manually via the main menu "Printer" ► "webMessage".

Caution

Loss of important information

The display of webMessages can cover other important information on the screen. Users have to make sure that they are always sufficiently informed about the health status of the patient.

9.8 Display of the corpuls.mission QR Code

Via the main menu "Telemetry" ► "QR code", a QR code can be displayed which unequivocally identifies the telemetry connection between the corpuls3 and corpuls.mission **LIVE**. If users join a corpuls.mission **CONFERENCE** mission with the corpuls.mission **App** installed on their cell phone, they can scan this QR code and so have the data from the corpuls3 displayed. For the QR code to work properly, the device ID must be configured.

Note

For an active data connection, corresponding licenses for corpuls.mission **LIVE** and corpuls.mission **CONFERENCE** are necessary.

10 Maintenance and Tests

10.1 General Information

Regular maintenance and testing guarantee permanent functional and operational readiness of the corpuls3.

Visual and Function Check

Therefore, make sure that the device and the accessories are in good working condition before each mission by performing visual and function checks on the corpuls3 at regular intervals.

This way, electrical and mechanical malfunctions may be either prevented or detected early on and eliminated quickly. If difficulties occur during the visual and function check, see chapter 11 Procedure in Case of Malfunctions, page 243 for specific measures to take. Follow the instructions.



Warning

Risk of malfunction

If the malfunction cannot be remedied with these measures, please inform customer service. In extreme cases, it may be necessary to take the corpuls3 out of commission.

For guidance, a checklist for standardised testing of the corpuls3 is included in Appendix 0 of this user manual.

Regular checks

The following schedule for maintenance and tests shows recommended intervals for performing checks. Compliance with legal regulations relating to safety and metrological checks must be guaranteed. Furthermore, it is recommended to schedule regular function checks at the location of the corpuls3 (rescue equipment, location, hospital, etc.) to guarantee full operational readiness at all times.

For further information on maintenance and testing of the corpuls3 that go beyond the contents of this user manual, contact the service technicians of an authorised sales and service partner.

Measure	Daily/ per shift**	After use*	As required *	Monthly	Annually**	Every 2 years**	If faulty**
Complete function check	X	X	X	X			X
Visual check	X	X	X				X
User test/device checklist	X		X				
Cleaning the corpuls3		X	X				
Disinfecting the corpuls3		X	X				
Shock paddles	X		X	X			
Module connection test	X		X				
Technical Safety Check (STK)					X		X
Metrological check (MC)						X	

Table 10-1 Maintenance intervals

*Manufacturer's recommendation

** Mandatory

10.2 Function checks

Function checks performed by the user guarantee permanent functional and operational readiness of the corpuls3. It is an important supplement to the automatic self-test performed internally in the corpuls3. Depending on the frequency of use of the corpuls3, it is mandatory that you perform the function check at least once a day, for example at the beginning of a shift.

The complete function check of the corpuls3 is divided into:

- Function check of the corpuls3
- Function check of the power supply
- Function check of the accessories

Function check of the device

Function check of the corpuls3 comprises a visual inspection of the outer housing and a function check of the functionalities/options of the corpuls3.

Function check of the power supply

The function check of the power supply informs the user about the current state of charge of the batteries.

Checking accessories

Function check of the accessories and consumables guarantees the operational readiness of all equipment required during use of the corpuls3. Furthermore the accessories are visually checked for defects and completeness.

If no correct result is achieved on performing the function checks, read the explanations and measures in chapter 11 Procedure in Case of Malfunctions, page 243.

10.2.1 Daily Checks of the Device

For a function check of the compact device, all the modules of the corpuls3 must be connected mechanically. The mechanical connections have to be heard to click into place. The following measures must be taken:



Warning

Risk of electrical shock

Before using the testbox (P/N 04310), the testload (P/N 04312) or the corpuls simulator (P/N 04311) the cable has to be checked for damage. If there is damage, the testbox/testload or the corpuls simulator may not be used under any circumstances.

Daily check		
Description	**Measures by the user**	**Correct result**
Switching on	Press the **On/Off** key.	The start logo appears
Internal self-test		
The corpuls3 performs a test of the internal functions	None	▪ The jog dial briefly illuminates at the beginning. ▪ The screen is illuminated. ▪ Curve and parameter fields are displayed. ▪ The state of charge of the batteries is displayed in percent or in minutes of remaining running time. ▪ The device is sufficiently charged. ▪ Connection status of the modules is displayed.
Module connection test		
Communication between modules	▪ Separating all modules ▪ Re-connecting all modules	▪ In the status-/alarm line the connection status changes from bar symbol to wave symbol. ▪ In the status-/alarm line the connection status changes from wave symbol to bar symbol. ▪ No error message is issued.
Shock paddles		
Check function of the shock paddle buttons.	▪ Make sure that no residue from the electrode gel remains on the contact areas. ▪ Press the shock paddle buttons a few times to ensure perfect functionality. ▪ Deliver a shock (see below: Function check of defibrillator/pacer).	▪ By pressing the shock paddle buttons a confirmative tone sounds. ▪ Energy is internally discharged via the test contacts. ▪ No error message is issued.
Check the functionality of the shock paddle buttons at the defibrillator/pacer SLIM.	▪ Make sure that no residue from the electrode gel remains on the contact areas. ▪ Connect the shock paddles to the therapy master cable at the defibrillator/pacer SLIM. ▪ Press the shock paddle buttons a few times to ensure perfect functionality. ▪ Deliver a shock (see below: Function check of defibrillator/pacer)	▪ By pressing the shock paddle buttons a confirmative tone sounds. ▪ No error message is issued.

Daily check		
Description	**Measures by the user**	**Correct result**
Defibrillator/pacer		
Function check of the defibrillator/ pacer	When using shock paddles: ▪ Insert shock paddles into the shock paddle holder. The shock paddles must be heard to click into place. ▪ Connect the shock paddle cable to the therapy master cable. ▪ Select the manual mode of the defibrillator. ▪ Select an energy of 200 J. ▪ Charge energy. ▪ Deliver shock. ▪ Also check reserve shock paddles, if necessary.	▪ By pressing the shock paddle buttons a confirmative tone sounds. ▪ Energy is internally discharged via the test contacts. ▪ No error message is issued. ▪ Successful shock is indicated by - "**Shock performed** is displayed in the message line - Number of shocks increased by 1 - Shock protocol printout shows selected and delivered energy
	When using corPatch electrodes: ▪ Insert the plug of the therapy master cable into the test contact socket at the cable base. ▪ Select the manual mode of the defibrillator. ▪ Select an energy of 200 J. ▪ Charge energy. ▪ Deliver shock.	▪ Energy is internally discharged via the test contact socket. ▪ No error message is issued. ▪ Successful shock is indicated by - "**Shock performed** is displayed in the message line - Number of shocks increased by 1 - Shock protocol printout shows message "**Test successful**"
Function check of the defibrillator/ pacer SLIM	For the function check the testbox (P/N 04310), the testload (P/N 04312) or the corpuls simulator (P/N 04311) is needed: ▪ Make sure that a 1.5 V battery is inserted in the testbox/corpuls simulator. ▪ Switch on testbox/corpuls simulator. ▪ Connect testbox/testload/ corpuls simulator to the therapy socket. ▪ Confirm the message "**Mark mission as test mission?**" by pressing the softkey [Yes]. ▪ Select the manual mode of the defibrillator. ▪ For the testload, select an energy of 50 J (max. 100 J). For the testbox/ corpuls simulator, select an energy of 200 J. ▪ Charge energy. ▪ Deliver shock. ▪ After performing the function check, switch off testbox/testload/ corpuls simulator and remove it from the defibrillator/pacer SLIM.	▪ Energy is discharged via the testbox/testload/ corpuls simulator. NB: Due to the higher internal resistance of the Testload, 50 J are sufficient to test the HV unit. ▪ No error message is issued. ▪ Successful shock is indicated by - "**Shock performed** is displayed in the message line - Number of shocks increased by 1 - Shock protocol printout shows message "**Test successful**"

Daily check		
Description	**Measures by the user**	**Correct result**
Printer		
Function check of the printer	▪ Check if sufficient printer paper is available. ▪ Check if the marking indicating the end of the paper roll (red stripe) is visible. ▪ Run a test printout, e.g. a screenshot. ▪ Check if an replacement roll is present.	▪ A strip of paper is issued. ▪ The marking indicating the end of the paper roll is not yet visible. It is recommended to load a new roll of paper as soon as this marking is visible. ▪ The appearance of the type is completely legible and of good quality. ▪ A replacement roll is present.
Power supply		
State of charge check of the batteries of the corpuls3 as compact device	▪ Connect all modules of the corpuls3 (compact device). ▪ Connect corpuls3 to the mains supply (either via the charging bracket or and external mains charger). ▪ Switch on the corpuls3 and check the state of charge of the batteries (percentage) in the status-/alarm line after the booting process.	• State of charge of the battery is greater than 30 %. ▪ If the corpuls3 probably will be used at low ambient temperatures (e.g. in the cold season) the state of charge should be more than 50 % (at room temperature).
Check the remaining running time of the individual modules	▪ Separate all corpuls3 modules in the switched-on state. ▪ Remove the charging cable of the mains charger or remove the module from its charging bracket. ▪ Check the predicted remaining running time of the monitoring unit and patient box in the status-/alarm line.	• The remaining running time of the modules is more than 120 minutes.

Table 10-2 Daily check of the device

Visual check of the corpuls3 and the accessories		
Presence and serviceability of	**Measures by the user**	**Correct result**
corpuls3	Check the complete corpuls3 for alterations	No objections
Batteries	Check if each module of the corpuls3 has a battery inserted.	All modules of corpuls3 have a battery.
corPatch intermediate cable (if available)	Check if the corPatch intermediate cable is present and undamaged.	The corPatch intermediate cable is present and undamaged.
corPatch electrodes (adult and paediatric)	▪ Check if at least two pairs of serviceable corPatch electrodes are present. ▪ Check if the packaging of the corPatch electrodes is undamaged. ▪ Check if the expiry date of the corPatch electrodes has passed.	▪ At least two pairs of corPatch electrodes are present. ▪ The packaging of the corPatch electrodes is undamaged. ▪ The expiry date has not passed.

Daily check		
Description	**Measures by the user**	**Correct result**
Shock paddles	▪ Remove shock paddles. ▪ Completely unwind the therapy master cable from the socket. ▪ Inspect shock paddles and therapy master cable for damage. ▪ Check if replacement shock paddles are present.	▪ Shock paddles and therapy master cable are not damaged. ▪ Replacement shock paddles are present. ▪ All in all, no damage is detectable.
Baby shock electrodes	▪ Check if the baby shock electrodes are present, clean and undamaged.	▪ Baby shock electrodes are present, clean and undamaged.
Electrode gel for defibrillation	▪ Estimate if the quantity of electrode gel is sufficient for the next mission.	▪ Sufficient electrode gel incl. replacement tube is present.
ECG adhesive electrodes	▪ Check if sufficient ECG adhesive electrodes for recording the monitoring and diagnostic ECG are present. ▪ Check if the ECG adhesive electrodes are dried out or the expiry date has passed. ▪ Store the ECG adhesive electrodes protected from air.	▪ Sufficient ECG adhesive electrodes are present for the next mission. ▪ The ECG adhesive electrodes are not dried out. ▪ The expiry date of the ECG adhesive electrodes has not passed.
Oximetry intermediate cable and sensors	▪ Check if the oximetry intermediate cable and the oximetry sensors are present and undamaged.	▪ Oximetry intermediate cable and oximetry sensors are present and undamaged.
Disposable CO_2 adapters	▪ Check if two of every kind of disposable CO_2 adapters are present and undamaged.	▪ Two of every kind of disposable CO_2 adapters are present and undamaged.
CO2 sensor and intermediate cable	▪ Check if the CO2 sensor is connected to the CO2 intermediate cable and that the latter is connected to the patient box of the corpuls3. Check of the different CO2 displays on the corpuls3.	▪ CO2 sensor and CO2 intermediate cable are connected and undamaged. The message "No sensor" is not displayed.
CPR feedback sensors	▪ Check if at least two pairs of functional CPR feedback sensors are present. ▪ Check if the packages of the CPR feedback sensors are intact. ▪ Check if the expiry date of the CPR feedback sensors has passed.	▪ At least two pairs of functional CPR feedback sensors are present. ▪ The packages of the CPR feedback sensors are intact. ▪ The expiry date of the CPR feedback sensors has not passed.
NIBP cuff and hose	▪ Check if the NIBP cuff and -hose are present and undamaged.	▪ NIBP cuff and -hose are present and undamaged.
IBP transducers	▪ Check if IBP transducers are present and undamaged.	▪ IBP transducers are present and undamaged.
Temperature sensors	▪ Check if the temperature sensors are present and undamaged.	▪ Temperature sensors are present and undamaged.
CompactFlash® card	▪ Check if the CompactFlash® card is inserted into the patient box.	▪ The CompactFlash® card is inserted into the patient box.

Daily check		
Description	**Measures by the user**	**Correct result**
Switching off		
On/Off key	▪ Press the **On/Off** key. ▪ Confirm the switch-off with the softkey [OK].	▪ "`Power off?`" appears in the message line. ▪ The screen shows the shutdown image. ▪ The corpuls3 is switched off.

Table 10-3 Daily visual check of the corpuls3 and the accessories

10.2.2 Monthly Functional Test

Monthly functional test (in addition to the daily check)		
Description	**Measures by the user**	**Correct result**
ECG Monitoring		
Function check of the ECG monitoring cable and the complementary ECG diagnostic cable	▪ Connect the ECG cables to the ECG cable tester corpuls3 (P/N 04224), the testbox (P/N 04310), to an ECG simulator or to a volunteer. For optimal results, select an amplification of x0.5. ▪ If the heart rate or the ECG are not displayed in a parameter- or curve field, assign the display to a parameter- or curve field.	The ECG is displayed as expected in the configured curve fields.
Defibrillator/pacer		
Function check of the defibrillator/ pacer	▪ See Daily Checks of the Device, Defibrillator/Pacer ▪ If necessary, also test pacer function.	▪ --
Function check of the defibrillator/ pacer SLIM	▪ See Daily Checks of the Device, Defibrillator/Pacer SLIM ▪ If necessary, also test pacer function.	▪ --
Oximetry		
Function check of oximetry measurement	▪ Attach oximetry sensor with intermediate cable to a finger. ▪ If the SpO_2-, SpCO-, SpHb-, SpMet value, the pulse rate, the perfusion index or the plethysmogram are not displayed in a parameter or curve field, they may be not configured. Select the display in a parameter or curve field.	▪ The oximetry values are displayed in one or more parameter field. ▪ The pulse rate is displayed in a parameter field (PR). ▪ The plethysmogram is displayed in a curve field.

Monthly functional test (in addition to the daily check)		
Description	**Measures by the user**	**Correct result**
Capnometry		
Function check of CO_2 measurement	▪ Connect a disinfected airway adapter to the CO_2 sensors and attach the connecting cable to the patient box. ▪ Breathe in and out through the adapter several times. ▪ If the CO_2 value, respiration rate or the capnogram is not displayed in a parameter or curve field, they may be not configured. Select the display in a parameter or curve field.	▪ The CO_2 value is displayed in a parameter field. ▪ The respiration rate (RR) is displayed in a parameter field. ▪ The capnogram is displayed in a curve field.
Temperature measurement		
Function check of temperature measurement	▪ Connect a temperature sensor to the patient box. ▪ If the temperature value is not displayed in a parameter field, it may be not configured. Select the parameter field in which the value should be shown. ▪ Take the temperature sensor into your hand.	▪ Display of the room temperature. ▪ The temperature measuring value increases when the temperature sensor is in your hand.
Non-invasive blood pressure measurement		
Function check of non-invasive blood pressure monitoring	▪ Perform a blood pressure measurement on a volunteer subject with the NIBP cuff. ▪ If the non-invasive blood pressure value is not displayed in a parameter field, it may be not configured. Select the parameter field in which the value should be shown.	The blood pressure is displayed in a parameter field.
Invasive blood pressure measurement		
Ability to calibrate the transducer	▪ Test the ability to calibrate the transducer. To do this, expose the transducer to atmospheric pressure. ▪ Select in the main menu "IBP" ► "Calibr. P1".	After successful calibration a pressure of 0/0 mmHg is displayed.
Function check of invasive blood pressure measurement	▪ Various transducers have equipment for a functional test. Perform the functional test according to the operating instructions for the transducer. ▪ If the measured value of invasive blood pressure is not displayed in a parameter or curve field, it may be not configured. Select the display in a parameter or curve field.	▪ An invasive blood pressure is displayed in the parameter or curve field after the functional test is complete. ▪ The displayed pressure curve shows scaling.

Monthly functional test (in addition to the daily check)		
Description	**Measures by the user**	**Correct result**
CPR feedback		
Function check of the CPR feedback	▪ The selftest performed when selecting "Defib" ▶ "CPR test" (user level OPERATOR) only checks if the CPR module is functional. ▪ To test the CPR function and the CPR sensor, select the manual mode of the defibrillator. ▪ Connect the CPR sensor to the CPR intermediate cable leading to the patient box. ▪ Move the CPR sensor up and down, approx. at compression rate. ▪ If the CPR rate or -curve are not displayed in a parameter- or curve field, it is possible that the configuration has not been set. Assign the display to a parameter- or curve field.	▪ The compression rate (CPR rate) is displayed in a parameter field. ▪ The CPR curve is displayed in a curve field. ▪ Speech- and text messages "**Push harder**", "**Good compressions**", and "**Fully release**" are played.
Memory card		
Check the memory space on the Compact-Flash® card.	▪ Check in the mission browser whether there is sufficient memory space for further missions.	▪ A free memory space of at least 25% is indicated.
Alarm function test		
Checking visual and auditory alarm signals.	▪ Connects sensors for the parameter to be checked. ▪ Change upper or lower alarm limits to provoke an alarm.	▪ Visual and auditory alarm signals are issued.

Table 10-4 Monthly functional test

10.3 Automatic self-test:

Self-test

The corpuls3 performs a complete system check each time it is switched on. This internal automatic self-test checks the system components.



If error messages appear during automatic self-test, these are displayed in the status-/alarm line and listed in the event history. These error messages can be confirmed by pressing the **Alarm** key.

10.4 Regular Maintenance Work

10.4.1 Technical Safety Check

Pursuant to § 12 MPBetreibV (Medical Device Operators' Ordinance, applicable to the Federal Republic of Germany), operators must ensure that their devices are subject to regular safety checks. Violations of this regulation may have consequences under penal law.

Pursuant to Sec. 12 para. 4 MPBetreibV, the technical safety checks are only considered as performed and consequently valid if performed by the manufacturer or by a specialist company according to the manufacturer's specifications.

The corpuls3 has to be subject to a safety check every 12 months. The scope of this check is based on the corresponding test regulation and checklist.

10.4.2 Metrological Check

Pursuant to § 15 MPBetreibV (Medical Device Operators' Ordinance, applicable to the Federal Republic of Germany), it is mandatory to perform metrological checks every 2 years on the non-invasive blood pressure (NIBP) and temperature measurement functions.

For all further measurement functions included in the corpuls3 (ECG, Oximetry, CO_2, IBP), regular metrological checks are recommended.

If a malfunction is suspected, it is mandatory to perform metrological checks.

In states outside Germany, the national regulations or those based on EC directives concerning the scope and timely performance of metrological checks.



Caution

Risk of inadequate therapy

Metrological checks may only be performed by authorised personnel with calibrated measuring devices, measurement standards and simulators.

10.4.3 Repair and Service

Any inspection-, maintenance- and cleaning tasks other than those listed in chapter 10.2 Function checks, page 226 may only be performed by authorised technicians.



Warning

Risk of electrical shock

The defibrillator must not be opened. Internal components may carry high voltages. Failure to observe this may result in severe injuries or death.

If a fault is suspected, have the device checked by the authorised sales and service partner and, if necessary, repaired.

Repair and service may only be performed by authorised sales and service partners. If technical repairs are not performed by trained technicians instructed by the manufacturer, this many result in damage to the corpuls3 and loss of any claim under the warranty of GS Elektromedizinische Geräte G. Stemple GmbH.

To avoid transport damage when dispatching devices, care should be taken to ensure they are suitably packed. Ideally, the original packaging should be used. A packaging instruction is available from GS Elektromedizinische Geräte G. Stemple GmbH upon request.

10.5 Loading the printer paper

The printer paper has a marking in form of a red stripe at its edge indicating the end of the paper roll. It is recommended to load a new roll of paper as soon as this marking is visible.

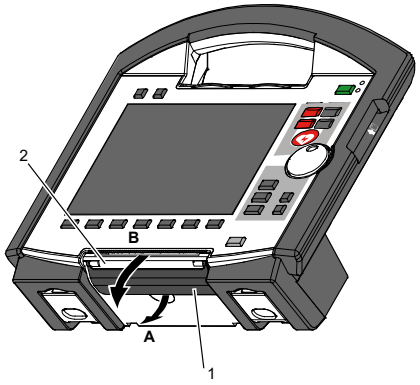

Fig. 10-1 Opening the printer flap

1 Locking lever
2 Printer flap

Note To avoid damage to the printer flap, the monitoring unit, when disconnected from the defibrillator/pacer, should be placed on a flat surface to load the printer paper.

1. Pull the locking lever (item 1) of the printer flap slightly downwards to unlock (item A) the printer flap (item 2) and open it downwards (item B).

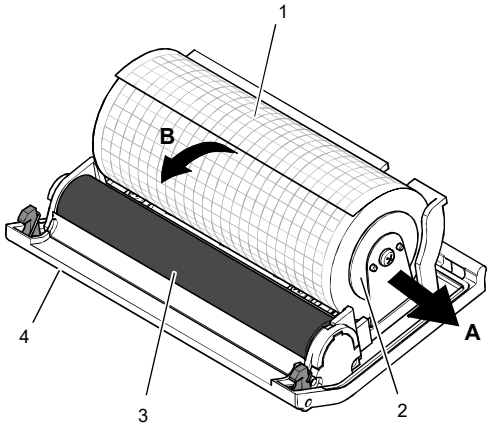

Fig. 10-2 Printer

1 Roll of paper
2 Paper roll holder (2x)
3 Transport reel
4 Printer flap

2. Push the paper roll holder on both sides slightly outwards (item A) to remove the roll of paper.

3. Insert a new roll of paper into the holder (item 2) so that the end of the paper has its printed side facing upwards and forwards.
4. Pull (item B) the paper forwards over the edge of the printer flap (item 4) and hold.
5. Pull the locking lever (item 1) of the printer flap slightly downwards, then swivel the printer flap upward and close the printer compartment.
6. Make sure that the locking hooks at the printer flap are firmly engaged on both sides.

Note Always tear off the paper upwards on the cutting edge to avoid paper jams or other printing problems.

Note Always close the printer flap with the locking lever pulled, otherwise there may be mechanical damage.

10.6 Replace battery

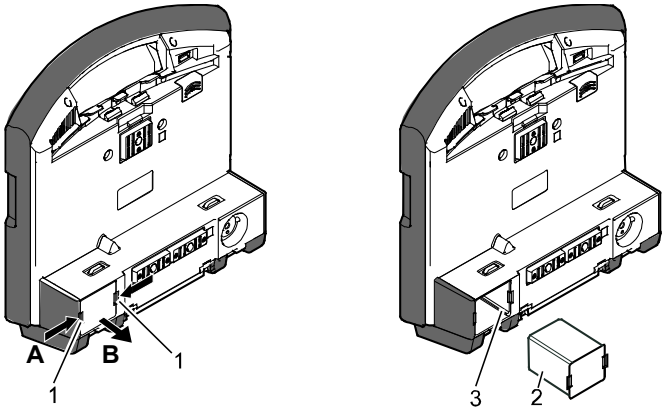

Fig. 10-3 Changing the battery (monitoring unit)

1 Locking clip
2 Battery
3 Connection coding

The battery of the patient box is located at the bottom of the housing.

The battery of the defibrillator/pacer is likewise located at the bottom of the housing. To replace the battery, it must be tilted rearwards as far as possible.

The battery of the defibrillator/pacer SLIM is located at the left side.

At all modules the batteries are replaced as follows:

1. Pinch together (item A) the two locking clips (item 1) on the battery (item 2) and pull out the battery (item B).
2. Insert a new battery in the opening until it is heard to click into place on both sides.
3. Make sure that the locking clips on both sides are firmly engaged.
4. Check if the battery is fully charged.

Note Due to a bevelled edge the battery can only be inserted in one way.

Note When a (new) battery is inserted in a module, this module can switch on automatically.

If the module cannot be switched on after changing the battery, remove battery and after waiting approx. 20 seconds, insert again.

Note For changing the battery on the patient box first switch it off and then change the battery within approx. 30 seconds. Under certain circumstances, the set time/date may be lost.

10.7 Cleaning, Disinfection and Sterilisation

Before commissioning the device and after every application or use, all used components must be cleaned and disinfected. The respective accepted standards of hygiene for handling and disinfecting equipment contaminated with bodily fluids must be observed. The locally valid regulations for disposal of infectious waste and material contaminated with bodily fluids must be observed.



Caution

Damage caused by wrong cleaning and disinfection!

Can impair the functions of the corpuls3 and the accessories or lead to damage to the material (formation of fissures, material fatigue).

- To remove dirt or stains use clean cloths or soft brushes exclusively.
- Only use cleaning- and disinfecting agents recommended by the manufacturer or other cleaning and disinfecting agents with equivalent substance groups.
- Take notice of possibly deviating application instructions of the manufacturer of the cleaning and disinfecting agents.
- **Never** immerse the modules of the corpuls3 and accessories in cleaning/disinfection liquids, only apply on the surface.
- Do not let fluids penetrate into the plug connections.
- Do not clean/disinfect the modules of the corpuls3 and accessories by machine and do not sterilise them in an autoclave, under pressure or with gas.



Caution

Cancellation of the cleaning/disinfection effect

Never mix different cleaning-/disinfection agents, because there can be interactions between the substances that can cancel out their cleaning/disinfection effects.

Rinse with clear water between the application of different cleaning or disinfecting liquids.



Caution

Damage due to use of wrong disinfection agents!

Can impair the functions of the corpuls3 and the accessories or lead to damage to the material (formation of fissures, material fatigue). Do not use disinfectants based on the following active ingredients:

- Alkyl amine compounds.
- Phenolic compounds.
- Halogen-releasing compounds.
- Strong organic acids.

10.7.1 Recommended Cleaning- and Disinfecting Agents

The following disinfectants of PAUL HARTMANN AG (Bode Chemie) have been tested by the manufacturer and are recommended for effectiveness and material compatibility:

Disinfectants	Active ingredients	CAS No.	Max. application concentration % (m/m)
Mikrobac® Virucidal Tissues	Quaternary ammonium compounds	7173-51-5	0.25
		68391-01-5	0.25
	Aminoalcohols	141-43-5	1
Bacillol® 30 Sensitive	Alcohols	71-23-8	10
		67-63-0	20
		64-17-5	20
	Tenside	139734-65-9	0.25

Disinfectants	Active ingredients	CAS No.	Max. application concentration % (m/m)
Dismozon® plus	Peroxide	84665-66-7	100
	Fatty alcohol	69011-36-5	2.5
	Amin	308062-28-4	2.5
Kohrsolin® FF	Aldehyd	111-30-8	10
	Surfactants	69011-36-5	10
		68439-50-9	10
	Quaternary ammonium compounds	7173-51-5	5
		68391-01-5	5
	Alcohol	67-63-0	3
Mikrobac® Forte	Quaternary ammonium compounds	68391-01-5	20
	Amin	2372-82-9	5
	Surfactants	69011-36-5	3
		68439-50-9	2.5

Table 10-5 Overview of recommended disinfectants, active ingredients with concentration

Note When using other disinfectants, make sure those belong to the same group of active substances.

10.7.2 Monitoring Unit, Patient Box and Defibrillator/Pacer



Warning

Risk of electrical shock

Switch off the modules and disconnect from power supply before cleaning.

Cleaning/ disinfecting the corpuls3

1. Separate the compact device into the three modules.
2. Unplug all the cables on the patient box.
3. Remove the patient box from the accessory bag.

   Disconnect the shock paddles from the therapy master cable and remove from the defibrillator holders.

   Cleaning the corpuls3:
   Wipe off visible and coarse dirt from the outer surfaces of the three modules with a moist disposable tissue.
   Disinfecting the corpuls3:
   Clean all surfaces with a disposable tissue soaked in disinfection agent. Disinfect all surfaces with an appropriate disinfectant. Observe the application time of the disinfectant in accordance with the manufacturer's instructions and let dry completely. To remove any disinfectant residues, wipe with a soft cloth soaked in clean water and then allow to dry.
4. Wipe the infrared interfaces of the monitoring unit with a cloth (see Fig. 10-4, item 1 and item 2).

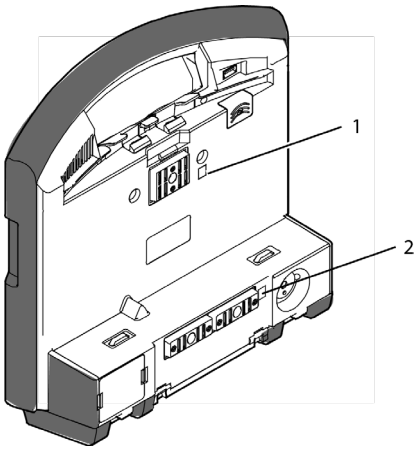

Fig. 10-4 Monitoring unit, infrared interfaces

1 Infrared interface
2 Infrared interface

5. Wipe the infrared interface of the patient box with a cloth (see Fig. 10-5, item 1).

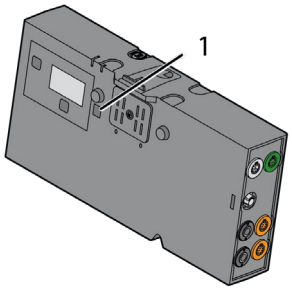

Fig. 10-5 Patient box, infrared interface

1 Infrared interface

6. Wipe the infrared interface of the defibrillator/pacer with a cloth (see Fig. 10-6, item 1).

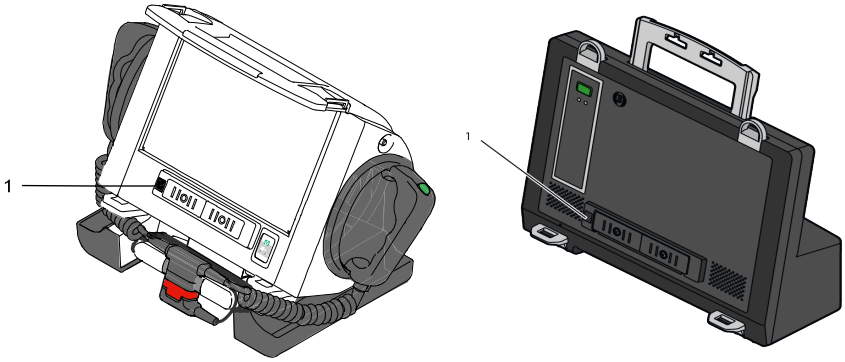

Fig. 10-6 Defibrillator/Pacer, infrared interface

1 Infrared interface

10.7.3 Shock paddles

Cleaning

1. Clean the cable and the electrode surface with soap solution consisting of a cleaning agent (ph value 7-8) and clean tap water (drinking quality). Dampen a clean, lint-free cloth with soap solution and thoroughly wipe the device. In case there are grooves, gaps and other geometrical shapes, ball up, fold, or twist the dampened cloth to fit or press the cloth in with your fingernail.

Make sure that

- no residual electrode gel or other contaminations remain;
- the electrode surface is not scratched.

2. Allow the device to air dry completely.

Make sure that

- no moisture penetrates into the plug interfaces,
- the plug connections are completely dry.

Disinfection Disinfect the electrode plates of the shock paddles with a disposable wipe soaked in disinfectant. Disinfect all surfaces with an appropriate disinfectant. Observe the application time of the disinfectant in accordance with the manufacturer's instructions and let dry completely. To remove any disinfectant residues, wipe with a soft cloth soaked in clean water and then allow to dry.



Warning

Risk of electrical shock

Do not immerse the shock paddles in liquid.

10.7.4 Baby shock electrodes

Cleaning

1. Clean the cable and the electrode surface with soap solution consisting of a cleaning agent (ph value 7-8) and clean tap water (drinking quality). Dampen a clean, lint-free cloth with soap solution and thoroughly wipe the device. In case there are grooves, gaps and other geometrical shapes, ball up, fold, or twist the dampened cloth to fit or press the cloth in with your fingernail.

Make sure that

- no residual electrode gel or other contaminations remain;
- the electrode surface is not scratched.

2. Allow the device to air dry completely.

Make sure that

- no moisture penetrates into the plug interfaces,
- the plug connections are completely dry,
- contact springs are clean.

Disinfection Disinfect the electrode plates of the shock paddles with a disposable wipe soaked in disinfectant. Disinfect all surfaces with an appropriate disinfectant. Observe the application time of the disinfectant in accordance with the manufacturer's instructions and let dry completely. To remove any disinfectant residues, wipe with a soft cloth soaked in clean water and then allow to dry.



Warning

Risk of electrical shock

Do not immerse the baby shock electrodes in liquid.

10.7.5 Therapy master cable

Cleaning

1. Clean the therapy master cable with soap solution.
   Prevent moisture entering the plug connector.
2. Dry the plug connection thoroughly.

Disinfection Disinfect the therapy master cable with a disposable wipe soaked in disinfectant. Disinfect all surfaces with an appropriate disinfectant. Observe the application time of the disinfectant in accordance with the manufacturer's instructions and let dry completely. To remove any disinfectant residues, wipe with a soft cloth soaked in clean water and then allow to dry.

10.7.6 Cable for monitoring functions

Cleaning

1. Clean the following cables with soap solution:
   - 4-pole ECG monitoring cable
   - complementary 6-pole ECG diagnostic cable
   - CPR intermediate cable
   - CO_2 intermediate cable
   - Oximetry intermediate cable
2. Prevent moisture entering the plug connectors.
3. Dry the plug connections thoroughly.

Disinfection

Disinfect the indicated cables with a disposable wipe soaked in disinfectant. Disinfect all surfaces with an appropriate disinfectant. Observe the application time of the disinfectant in accordance with the manufacturer's instructions and let dry completely. To remove any disinfectant residues, wipe with a soft cloth soaked in clean water and then allow to dry.

10.7.7 Oximetry sensor

Caution

Risk of inadequate therapy

Do not immerse oximetry sensors and cables in liquids.

No liquid must enter the sensor components or plugs.

Cleaning

Read and follow the operating instructions from the Masimo® company enclosed with the oximetry sensors.

Disinfection

1. Disinfect the oximetry sensors and oximetry cables with a disposable wipe soaked in disinfectant. Disinfect all surfaces with an appropriate disinfectant. Observe the application time of the disinfectant in accordance with the manufacturer's instructions and let dry completely.
2. Let dry the oximetry sensors and oximetry cables thoroughly. To remove any disinfectant residues, wipe with a soft cloth soaked in clean water and then allow to dry.

10.7.8 CO2 sensor

Caution

Risk of inadequate therapy

Never apply liquid directly to the sensors.

Cleaning

1. Moisten a soft cloth with an alcohol-based cleaning solution.
2. Wipe the surface with the cloth.

Note

Avoid scratches on the surface of the CO_2 sensors. Measurement can be impaired and/or rendered impossible by a scratched surface.

10.7.9 NIBP Cuffs and connecting hose

Cleaning

Clean the connecting hose and NIBP cuff with soap solution.

Disinfection

Disinfect the NIBP cuffs with a disposable wipe soaked in disinfectant. Disinfect all surfaces with an appropriate disinfectant. Observe the application time of the disinfectant in accordance with the manufacturer's instructions and let dry completely. To remove any disinfectant residues, wipe with a soft cloth soaked in clean water and then allow to dry.

Caution

Risk of inadequate therapy

Make sure no (disinfecting) liquid from the connecting hose reaches the NIBP socket at the patient box.

10.7.10 IBP transducer cable

Cleaning Disinfection Sterilisation

Read and follow the manufacturer's operating instructions enclosed with the IBP transducer.

10.7.11 Temperature sensor

Cleaning Disinfection Sterilisation

Read and follow the operating instructions from the manufacturer enclosed with the temperature sensor.

10.7.12 Accessory Bag, Carrying Strap and Backpack Carrying Strap

Cleaning and Disinfection

Clean the accessory bag, carrying strap or backpack carrying strap with a medium brush and soap or tarpaulin cleaner. Put in a disinfectant solution. Subsequently wash the accessory bag, carrying strap or backpack carrying strap in the washing machine (30 °C) using a laundry net and (liquid) detergent for delicates. Do not use the spin cycle. If possible, allow to air dry completely. Treat with impregnating spray. If necessary, treat the zippers with dry-film lubricant (silicone spray).

10.7.13 Charging brackets and MagCode connectors

Cleaning

If the two metal contacts in the contact field are oxidised (black), the device can no longer be charged. Clean the contact fields of the MagCode connectors (at the charging brackets, the AC adapter cable or at the DC connector cable) with a glass fibre brush.

10.8 Approved Accessories, Spare Parts and Consumables

The current list can be found at www.corpuls.world/en/service/approved-accessories.html. For further information, consultancy and sales, please contact your authorised sales and service partner.

Note

Before use, all accessories have to be checked for integrity, correct function, correct placement, etc. Repairs and maintenance may exclusively be performed by authorised personnel.



Warning

Risk of electrical shock

Defibrillation protection for patients, user and third parties **cannot** be guaranteed, if accessories other than those authorised by the manufacturer are used.



Caution

No patient monitoring

Using accessories that are not approved by the manufacturer can result in increased electromagnetic emissions or reduced electromagnetic immunity of the device and lead to faulty operation.

11 Procedure in Case of Malfunctions

11.1 Device alarms

The following table lists all alarms of the device with their priority and describes the cause of the malfunction as well as how to eliminate it. If these remedies should, against expectations, not be effective the device may be defective. Contact your authorised sales and service partners.

Alarm message	Priority	Explanation/corrective action
[X] sensor loose T[X] sensor loose	Technical patient alarm Medium priority	"X" stands for a temperature channel from 1 to 2. The sensor indicated has come loose from the measuring site at the body or from the intermediate cable. Check the sensor and reconnect if necessary. Measured temperatures of below 12°C may also trigger this alarm.
Abnormal ECG Abnormal ECG	Technical patient alarm High priority	Configurable warning in case the ECG measurement/interpretation algorithm "corpuls ACS" detects the presence of the Wolff-Parkinson-White (WPW) syndrome, of intraventricular excitation propagation disorders, of an implanted pacer, of QRS intervals longer than 120 ms or of a left bundle branch block in the ECG.
Acute MI / ischaemia Acute MI/ischaem.	Technical patient alarm High priority	Result of ECG interpretation by the Glasgow algorithm. The result must always be validated by a doctor.
Acute STEMI Acute STEMI	Technical patient alarm High priority	Result of ECG interpretation by the Glasgow algorithm. The result must always be validated by a doctor.
Battery low Battery low	System alarm High priority	The state of charge of the battery is less than 20 % of the total charge of the module. Connect the respective module to a power supply as soon as possible.
Battery temperature high Battery temp. high	System alarm Medium priority	The battery charging process lead to a great increase of temperature inside the battery (> 60°C). The corpuls3 or the respective module was possibly exposed to high temperatures. See appendix E Technical specifications, page 301. Interrupt charging process by disconnecting the corpuls3 from the mains power or from charger. If necessary, let the corpuls3 cool down or bring device to a cooler environment. Contact your authorised sales and service partners, if necessary.
Bluetooth connect. failed BT conn. fail.	System alarm Medium priority	The connection attempt to another device via Bluetooth interface failed. Repeat procedure. Contact your authorised sales and service partners, if necessary.
Borderline acute STEMI Borderl. acute STEMI	Technical patient alarm High priority	Result of ECG interpretation by the Glasgow algorithm. The result must always be validated by a doctor.
CEB abnormal	Technical patient alarm High priority	Result of the Cardiac Electrical Biomarker calculated in corpuls.mission **LIVE**.

Alarm message	Priority	Explanation/corrective action
CEB altered	Technical patient alarm High priority	Result of the Cardiac Electrical Biomarker calculated in corpuls.mission **LIVE**.
CF card almost full CF almost full	System alarm Low priority	The current capacity of the memory card (CompactFlash® card) amounts to less than 20% of the memory capacity or the number of missions is more than 999. Remove the memory card (CompactFlash® card) and save the contents on another storage medium (e. g. PC). Delete the data at regular intervals once they are no longer required. If the CF card is full, the mission data are no longer recorded.
CF card error CF card error	System alarm Low priority	The memory card (CompactFlash® card) is not correctly formatted. Remove the memory card and back up the contents on other storage media (e. g. PC). Format according to chapter 8.3 Handling Data, page 196. The memory card (CompactFlash® card) is faulty. The mission data of the current or of future missions are no longer recorded.
CF card full CF card full	System alarm Low priority	Remove the memory card (CompactFlash® card) and save the contents on another storage medium (e. g. PC). Delete the data at regular intervals once they are no longer required. The mission data of the current or of future missions are no longer recorded.
CF card missing CF card missing	System alarm Low priority	The memory card (CompactFlash® card) is not correctly inserted in the drawer of the patient box. The memory card (CompactFlash® card) is missing. The mission data of the current or of future missions are no longer recorded.
Check 4-pole ECG cable Check 4-pole cable	System alarm Medium priority	The 4-pole ECG monitoring cable is not connected correctly or the cable is defective. Check the respective cable and reconnect if necessary.
Check 6-pole ECG cable Check 6-pole cable	System alarm Medium priority	The 6-pole ECG cable is not connected correctly or the cable is defective. Check the respective cable and reconnect if necessary.
Check battery Check battery	System alarm Medium priority	The battery has to be checked as soon as possible and replaced, if necessary. Contact your authorised sales and service partners.
Check corpuls cpr	System alarm Medium priority	▪ The locking lever at the corpuls cpr is still open, ➢ Close the locking lever so the therapy can be started. ▪ General device check. ▪ The corpuls3 expects a BT response from the corpuls cpr, but does not get one. The alarm "Check corpuls cpr" appears simultaneous with the message. ➢ Press softkey [OK] to terminate the Bluetooth connection between the corpuls3 and the corpuls cpr and continue the therapy manually. ➢ Re-establish the BT connection when convenient.

Alarm message	Priority	Explanation/corrective action
Check pacer	System alarm High priority	The pacer is stimulating, but there is no connection between the monitoring unit and the defibrillator/pacer. The wireless communication between the patient box and the monitoring unit/defibrillator has been interrupted or could not be established: Make sure that the distance between the modules is not more than 10 m and that no barriers are compromising the radio connection. Use corpuls3 as a compact device if necessary. Communication in the connected state between the patient box and monitoring unit/defibrillator is cut off or could not be established: Check if one of the two infrared interfaces is covered or dirty. If necessary, use corpuls3 with radio connection. If necessary, contact your authorised sales and service partner.
Check plug therapy cable	System alarm High priority	The connectors of the therapy master cable and the therapy electrodes have been connected while turned the wrong way by 180 degrees and have to be checked for damage. If no damage is visible, connect the electrode plug again to the therapy master cable, oriented correctly. If the alarm message persists or damage is visible, the corpuls3 is not functioning correctly and must not be used. Contact your authorised sales and service partners.
Check printer paper	System alarm Medium priority	Open the paper flap. Check if the roll of paper in the printer is used up (marking is visible) and insert a new roll of paper. If there is a paper jam, pull the paper wound around the paper roller carefully off the roller with both hands. Close the paper flap and tear off the paper upwards on the cutting edge.
CO2 < [NUMBER] mmHg CO2 > [NUMBER] mmHg CO2 < [NUMBER] kPa CO2 > [NUMBER] kPa	Physiological patient alarm Medium priority	The measured carbondioxide level exceeds/falls below the upper/lower alarm limit. Check the patient's vital signs. Check alarm limit settings.
CO2 apnoea CO2 apnoea	Technical patient alarm High priority	An apnoea has been detected. Check respiration.
CO2 cable loose CO2 cable loose	System alarm Medium priority	The cable indicated is not connected to the patient box. Check the respective cable and reconnect if necessary.
CO2 sensor loose CO2 sensor loose	System alarm High priority	The sensor indicated is not correctly connected or has come loose from the endotracheal tube adapter or its holder. Check the respective sensor and reconnect if necessary.
Connect therapy electr.	System alarm High priority	Connect the corPatch electrodes or shock paddles to the therapy master cable of the corpuls3. If the alarm message persists, connect immediately the reserve corPatch electrodes.
Covert mode	High priority	This alarm message indicates that the device is in covert mode for stealth operations and that all acoustic and visual alarm signals have been disabled.
CPR cable loose CPR cable loose	System alarm Medium priority	The cable indicated is not connected to the patient box. Check the respective cable and reconnect if necessary.

Alarm message	Priority	Explanation/corrective action
CPR sensor loose CPR sensor loose	System alarm Medium priority	The sensor indicated has come loose from the intermediate cable. Check the sensor and reconnect if necessary.
CPR sensor-NOT F. PAT. USE CPR-NO PAT. USE	System alarm Medium priority	Using this sensor on a patient is prohibited. Contact your authorised sales and service partners.
D-ECG transmission error	System alarm Low priority	The device is already sending a D-ECG to the server. The transmission of another D-ECG to the server has failed. corpuls.mission **LIVE** cannot forward the D-ECG (no forwarding rule configured).
Def. Oxi adhes. sensor Def. Oxi adh. sen.	System alarm Medium priority	The adhesive sensor is defective or has expired. The sensor LED's have to be aligned directly over each other at the measuring site.
Defect. Oxi sensor Defect. Oxi sensor	System alarm Medium priority	The sensor is defect or not connected correctly. Disconnect sensor and connect again. If the sensor LED does not flash, the sensor has to be exchanged.
Defective IBP cable Defect. IBP cable	System alarm High priority	The IBP cable is not connected correctly or the cable is defective. Check the respective cable and reconnect if necessary.
Defective Oxi cable Defect. Oxi cable	System alarm Medium priority	The intermediate cable is defective or not connected correctly. Disconnect intermediate cable and connect again. If the sensor LED does not flash, the intermediate cable has to be exchanged.
Defib temperature high [X]	System alarm High priority	"X" stands for a failure number from 1 to 2. The defibrillator was very frequently charged within a short period. Avoid too frequent internal discharges.
Defibrillator alarm	System alarm High priority	The corpuls3 might not function correctly. Perform a defibrillator/pacer test (see chapter 10.2.1 Daily Checks of the Device, page 227). If the alarm persists, it should be checked by a service technician as soon as possible.
Defibrillator failure [X]	System alarm High priority	Internal error. "X" stands for a failure number from 1 to 7. The corpuls3 is possibly not functioning correctly and must not be used. Contact your authorised sales and service partners.
ECG cable (4-pole) loose 4-pole cable loose	System alarm Medium priority	Check if the 4-pole ECG monitoring cable is connected correctly to the patient box.
ECG cable (6-pole) loose 6-pole cable loose	System alarm Medium priority	Check if the complementary 6-pole ECG diagnostic cable is connected correctly to the patient box.
ECG electrode [X] loose Electr. [X] loose	Technical patient alarm Medium priority	„X“ stands for a an electrode L/LA, F/LL, R/RA or N/RL. Connect the clip of the 4 pole ECG monitoring cable to the loose ECG electrode (see chapter 6.4.2 Preparing the Patient for a D-ECG. page 116). Check ECG electrodes. Make sure that all clips are correctly connected to the contacts and/or the ECG electrodes are perfectly placed on the patient's skin.

Alarm message	Priority	Explanation/corrective action
ECG electrode [X] loose Electr. [X] loose	Technical patient alarm Medium priority	"X" stands for a an electrode number from V1 to V6. Connect the clip of the complementary 6-pole ECG diagnostic cable to the loose ECG electrode (see chapter 6.4.2 Preparing the Patient for a D-ECG. page 116). Check ECG electrodes. Make sure that all clips are correctly connected to the contacts and/or the ECG electrodes are perfectly placed on the patient's skin.
ECG electrodes loose ECG electr. loose	Technical patient alarm Medium priority	More than one ECG electrode are not connected to the patient. Check ECG electrodes.
ECG failure [X] ECG failure [X]	System alarm High priority	"X" stands for a failure number from 2 to 5. The corpuls3 is possibly not functioning correctly and must not be used. Contact your authorised sales and service partners.
Error CO2 module Error CO2 module	System alarm High priority	Check the CO_2 sensor. Measures according to need: attach CO_2 sensor to patient, attach CO_2 sensor to CO_2adapter or put CO_2 sensor into its holder in the accessory bag. Remove foreign body on the surface of the CO_2 sensor if necessary. If the alarm message persists, the measuring option mentioned is faulty. Contact your authorised sales and service partners.
Error CPR sensor/module Error CPR sen./mod.	System alarm Medium priority	Check the CPR sensor and the CPR intermediate cable and replace, if necessary. If the alarm message persists, the measuring option mentioned is faulty. Contact your authorised sales and service partners.
Error ECG module Error ECG module	System alarm High priority	The corpuls3 is possibly not functioning correctly and must not be used. Contact your authorised sales and service partners.
Error GSM module	System alarm Low priority	The GSM module is faulty. Contact your authorised sales and service partners.
Error IBP module Error IBP module	System alarm High priority	The measuring option mentioned is faulty. Contact your authorised sales and service partners.
Error insurance card	System alarm Low priority	The insurance card was not recognised/ could not be read. Take the insurance card out of the corpuls3 and check if it was inserted with the chip oriented towards the front. Only German, Austrian, Swiss and insurance cards and Belgian ID-cards are supported. The reading process may take up to 10 seconds.
Error NIBP hardware NIBP HW error	System alarm Medium priority	Wait up to 20 seconds to start measurement. The softkeys are greyed out as long as the selection is not available. If the patient is not in a critical condition, restart the corpuls3. Check if the patient as a palpable pulse.
Error NIBP module Error NIBP module	System alarm Medium priority	If the patient is not in a critical condition, restart the corpuls3. Check if the patient as a palpable pulse. Perform manual measurement.
Error T[X] Error T[X]	System alarm Medium priority	"X" stands for a temperature channel from 1 to 2. The measuring channel mentioned is defect. Contact your authorised sales and service partners.

Alarm message	Priority	Explanation/corrective action
Error temperature module Error temp module	System alarm Medium priority	The measuring option mentioned is faulty. Contact your authorised sales and service partners.
Extreme bradycardia Extreme bradycard.	Technical patient alarm High priority	Result of ECG interpretation by the Glasgow algorithm. The result must always be validated by a doctor.
Extreme tachycardia Extreme tachycard.	Technical patient alarm High priority	Result of ECG interpretation by the Glasgow algorithm. The result must always be validated by a doctor.
GPRS link error	System alarm Low priority	The APN is not configured or has not been saved. Configure APN anew and save configuration. Contact your mobile communications provider for the respective current APN.
GSM network not avail.	System alarm Low priority	The reception quality is too low. No connection to the mobile communications network can be established. If possible, select a location with better reception. If necessary, repeat procedure at a later time.
HR < [NUMBER]/min HR > [NUMBER]/min	Physiological patient alarm High priority	The measured heart rate exceeds/falls below the upper/lower alarm limit. Check the patient's vital signs. Check alarm limit settings.
HW conflict [MODULE]	System alarm Low priority	"MODULE" stands for either the monitoring unit, patient box or defibrillator/pacer. The connection authorisation (Pairing) has failed. Due to different hardware versions the modules used can only be used as compact device with an ad-hoc connection. If necessary, contact your authorised sales and service partner.
IBP calibration error IBP calibr. error	System alarm Medium priority	The calibration of the invasive pressure channel has failed. Repeat calibration.
IBP P[X] cable loose [X] cable loose	System alarm Medium priority	"X" stands for an IBP sensor P1 to P4. The cable indicated is not connected to the patient box while the device tries to calibrate the respective pressure channel. Check the respective cable and reconnect if necessary.
IBP P[X] sensor loose [X] sensor loose	Technical patient alarm Medium priority	"X" stands for an IBP sensor P1 to P4. The sensor indicated is not correctly connected to the transducer system or intermediate cable. The sensor is being calibrated. Check the respective sensor and reconnect if necessary.
Insurance card reader n. a.	System alarm Low priority	The insurance card reader could not be initialised. If the patient is not in a critical condition, restart the corpuls3. If the alarm message persists, contact your authorised sales and service partners.
Invalid Oxi adhes. sensor Inv. Oxi adh. sen.	System alarm Medium priority	A wrong adhesive sensor is used or the adhesive sensor is defective or has expired. The sensor has to be replaced by a correct one. The sensor LED's have to be aligned directly over each other at the measuring site.

Alarm message	Priority	Explanation/corrective action
Invalid Oxi cable Invalid Oxi cable	System alarm Medium priority	A wrong intermediate cable is used or the intermediate cable is defective or has expired. The intermediate cable has to be replaced by a correct one or a new one.
Invalid Oxi sensor Inval. Oxi sensor	System alarm Medium priority	A wrong sensor is used or the sensor is defective or has expired. The sensor has to be replaced by a correct one.
Invalid user settings Inval. settings	System alarm Medium priority	The loaded settings do not correspond to the imported settings. The corpuls3 uses factory settings.
Low perfusion [X] Low perf. [X]	Technical patient alarm Low priority	"X" stands for the vital parameters SpCO, SpHb or SpMet. The measured signal is too weak. Make sure that the patient lies calmly during the measurement and that there is no commotion caused by the vehicle. Select another measurement site.
Meets acute STEMI criteria M. acute STEMI crit.	Technical patient alarm High priority	Result of ECG interpretation by the Glasgow algorithm. The result must always be validated by a doctor.
Meets ST elevation MI criteria M. ST elevat. MI crit.	Technical patient alarm High priority	Result of ECG interpretation by the Glasgow algorithm. The result must always be validated by a doctor.
Module restarts Module restarts	System alarm High priority	Alarm message shown on the screen of the monitoring unit or patient box. The respective module restarts.
New webMessage	System alarm Low priority	Message for the user that a webMessage concerning the current mission has been arrived (see chapter 9.6, page 223).
NIBP automeas. failed Auto-NIBP fail.	System alarm Medium priority	Perform manual measurement. If the error persists, contact sales and service partner.
NIBP cuff overpressure NIBP cuff overpr.	System alarm Medium priority	Make sure that the patient does not lie on the hose or on the cuff. Make sure that the correct cuff size is used. Make sure that the hose is not bent or pinched. Make sure that the cuff is attached correctly.
NIBP dia < [NUMBER] mmHg NIBP dia > [NUMBER] mmHg	Physiological patient alarm Medium priority	The measured diastolic blood pressure exceeds or falls below the upper/lower alarm limit. Check the patient's vital signs. Check alarm limit settings.
NIBP inflating impossible NIBP no inflation	System alarm Medium priority	Make sure that the hose is not bent or pinched. Make sure that the patient does not lie on the hose or on the cuff. Make sure that the cuff is attached correctly.
NIBP measurement failed NIBP meas failed	System alarm Medium priority	Check if the cuff hose is properly connected, the cuff hose is bent, artefacts have occurred during measurement, the NIBP cuff was properly applied or another application error is present. Repeat measurement.

Alarm message	Priority	Explanation/corrective action
NIBP no signal NIBP no signal	Technical patient alarm Medium priority	Make sure that the patient lies calmly during the measurement and that there is no commotion caused by the vehicle. Make sure that the cuff is attached correctly. Make sure that the correct cuff size is used. Apply the cuff directly at the arm.
NIBP noisy/erratic signal NIBP noisy sig.	Technical patient alarm Medium priority	Make sure that the patient lies calmly during the measurement and that there is no commotion caused by the vehicle. Make sure that the cuff is attached correctly. Make sure that the correct cuff size is used. Apply the cuff directly at the arm.
NIBP not calibrated NIBP not calibr.	System alarm Medium priority	The measuring option mentioned is not calibrated. Contact your authorised sales and service partners.
NIBP out of range NIBP out of range	Technical patient alarm Medium priority	The measured pressure cannot be displayed because it is beyond the range of the device.
NIBP pneumatic blockage NIBP pneum block	System alarm Medium priority	Make sure that the patient does not lie on the hose or on the cuff. Make sure that the correct cuff size is used. Make sure that the hose is not bent or pinched. Make sure that the cuff is attached correctly.
NIBP safety off NIBP safety off	System alarm Medium priority	Check the status of the patient. Try measurement again. Make sure that the patient lies calmly during the measurement and that there is no commotion caused by the vehicle. Make sure that the cuff is attached correctly.
NIBP sys < [NUMBER] mmHg NIBP sys > [NUMBER] mmHg	Physiological patient alarm Medium priority	The measured systolic blood pressure exceeds or falls below the upper/lower alarm limit. Check the patient's vital signs. Check alarm limit settings.
NIBP weak signal NIBP weak signal	Technical patient alarm Medium priority	Make sure that the patient lies calmly during the measurement and that there is no commotion caused by the vehicle. Make sure that the cuff is attached correctly. Make sure that the correct cuff size is used. Apply the cuff directly at the arm.
No APN entered	System alarm Low priority	The APN is not configured or has not been saved. Configure APN anew and save configuration. Contact your mobile communications provider for the respective current APN.
No battery inserted No batt. inserted	System alarm High priority	The battery in the respective module is missing. Insert a battery and/or connect the modules together to be able to call on the energy reserves of the other modules if the corpuls3 is to be operated as a mobile device.

Alarm message	Priority	Explanation/corrective action
No conn. to Defib Defibrillator N/A	System alarm High priority	Check if the module is switched on. Wireless communication between the defibrillator and monitoring unit/patient box is cut off or could not be established. Make sure that the distance between the modules does not exceed 10 m and that no obstacles impair the connection. Use corpuls3 as a compact device if necessary. Communication in the connected state between the defibrillator and monitoring unit/patient box is cut off or could not be established. Check if one of the two infrared interfaces is covered or heavily soiled. If necessary, use corpuls3 with radio connection. If necessary, contact your authorised sales and service partner.
No conn. to Monitor Monitor N/A	System alarm High priority	Check if the module is switched on. Wireless communication between the defibrillator and monitoring unit/patient box is cut off or could not be established. Make sure that the distance between the modules does not exceed 10 m and that no obstacles impair the connection. Use corpuls3 as a compact device if necessary. Communication in the connected state between the defibrillator and monitoring unit/patient box is cut off or could not be established. Check if one of the two infrared interfaces is covered or heavily soiled.
No conn. to P-Box	System alarm High priority	Check if the module is switched on. Wireless communication between the defibrillator and monitoring unit/patient box is cut off or could not be established. Make sure that the distance between the modules does not exceed 10 m and that no obstacles impair the connection. Use corpuls3 as a compact device if necessary. Communication in the connected state between the defibrillator and monitoring unit/patient box is cut off or could not be established. Check if one of the two infrared interfaces is covered or heavily soiled.
No connection to [DEVICE] BT conn. lost	System alarm Medium priority	The connection to a Bluetooth device has been lost. "DEVICE" stands for an external device like e. g a ventilator, blood gas analysis device, corpuls1, corpuls cpr or any other device that can communicate with the corpuls3. Try again to establish connection.
No ECG cable	System alarm High priority	The corpuls3 is in AED mode with the shock paddles connected and the 4 pole ECG monitoring cable is not connected to the patient box. Connect the 4-pole ECG monitoring cable.
No ECG cable (Pacer)	System alarm High priority	The pacer is stimulating in DEMAND mode, but there is no 4-pole ECG cable connected or individual ECG electrodes are loose. Check if the 4-pole ECG monitoring cable is connected correctly to the patient box. Check ECG electrodes. Make sure that all clips are correctly connected to the contacts and/or the ECG electrodes are perfectly placed on the patient's skin.
No GSM PIN configured	System alarm Low priority	The PIN belonging to the SIM card has not been configured. Configure the PIN.

Alarm message	Priority	Explanation/corrective action
No Oxi adhesive sensor No Oxi adh. sen.	System alarm Medium priority	The cable of the adhesive sensor is not connected or not connected correctly. The sensor LED's have to be aligned directly over each other at the measuring site.
No Oxi sensor No Oxi sensor	System alarm Medium priority	The sensor cable is not connected or not connected correctly. Disconnect sensor cable and connect again. If the sensor LED does not flash, the sensor has to be exchanged.
No SIM card	System alarm Low priority	The SIM card is missing. The SIM card is not correctly inserted in the drawer of the monitoring unit. Insert the SIM card in the drawer in the monitoring unit.
NSTEMI	Technical patient alarm High priority	Configurable warning in case the ECG measurement/interpretation algorithm "corpuls ACS" detects a "NSTEMI" in the ECG. Check the therapy suggestion printed on the D-ECG.
NSTEMI possible	Technical patient alarm High priority	Configurable warning in case the ECG measurement/interpretation algorithm "corpuls ACS" detects a possible "NSTEMI" in the ECG. Check the therapy suggestion printed on the D-ECG.
ONLY FOR TEST ONLY FOR TESTS	System alarm High priority	The software of the module has been released only for test purposes. Using this module on a patient is prohibited. Contact your authorised sales and service partners.
Oxi adhes. sensor expired Oxi adh. sen. exp.	System alarm Medium priority	The adhesive sensor is defective or expired and has to be exchanged with a new one. The sensor LED's have to be aligned directly over each other at the measuring site.
Oxi cable expired Oxi cable exp.	System alarm Medium priority	The intermediate cable is expired and has to be exchanged with a new one.
Oxi cable loose Oxi cable loose	System alarm Medium priority	The cable indicated is not connected to the patient box. Check the respective cable and reconnect if necessary.
Oxi failure (X) Oxi failure (X)	Technical patient alarm Medium priority	"X" stands for a failure number from 1 to 10. The measuring option mentioned is faulty. In this case contact your authorised sales and service partner.
Oxi sensor expired Oxi sensor exp.	System alarm Medium priority	The sensor is expired and has to be exchanged with a new one.
Oxi sensor loose Oxi sensor loose	Technical patient alarm Medium priority	The sensor indicated has come loose from the measuring site at the body or from the intermediate cable. Check the respective sensor and reconnect if necessary.
Oxi: Check conn. to P-box Oxi: Check conn.	System alarm Medium priority	The sensor- or intermediate cable is not connected or not connected correctly. Disconnect sensor- or intermediate cable and connect again. If the sensor LED does not flash, the intermediate cable has to be exchanged.
Oxi: Demo tool Oxi: Demo tool	System alarm Medium priority	For demonstration purposes, a demo sensor has been connected. For measurement of patient data, the sensor has to be exchanged for a real sensor.

Alarm message	Priority	Explanation/corrective action
Oxi: Interference Oxi: Interference	Technical patient alarm Medium priority	Too strong ambient light on the patient (sensor). The light source has to be removed or reduced. Protect sensor from light. Attach sensor at another site.
Oxi: Low perfusion Oxi: Low perfusion	Technical patient alarm Medium priority	The measured signal is too weak. Make sure that the patient lies calmly during the measurement and that there is no commotion caused by the vehicle. Select another measurement site.
Oxi: SpO2 only mode Oxi: SpO2 only	System alarm Medium priority	If the calibration of the parameters SpCO, SpMet and SpHb is not possible, the corpuls3 switches to SpO_2-only mode. By disconnecting and re-connecting the sensor at the measuring site, calibration is started anew.
P(X) < [NUMBER] mmHg P(X) > [NUMBER] mmHg	Physiological patient alarm High priority	"X" stands for the invasive pressure channel 1-4. The measured pressure exceeds or falls below the upper/lower alarm limit. Check the patient's vital signs. Check alarm limit settings.
Pacer circuit open	System alarm High priority	Make sure that all cables and connecting plugs are connected correctly. Make sure that the corPatch electrodes are placed correctly.
Pacer failure	System alarm High priority	The pacing therapy must be checked immediately. The corpuls3 is possibly not functioning correctly and must not be used. Contact your authorised sales and service partners.
Pacer high impedance	Technical patient alarm High priority	The electrical resistance of the patient (impedance) is to high for the selected settings. An intensity for stimulation has been selected that cannot be reached with the impedance present. Make sure that the corPatch electrodes are tightly and completely attached to the patient's skin. In case of excessive hair on the patient, shave the required area on the skin. If necessary, use new corPatch electrodes. To perform a pacer therapy adaequate for the patient, a higher stimulation intensity must be selected. Perform medical measures as needed.
Pacing not possible	System alarm High priority	The corpuls3 is possibly not functioning correctly and must not be used. Contact your authorised sales and service partners.
Pairing failed	System alarm Low priority	The connection authorisation (Pairing) has failed. For further information see chapter 3.2.1 Pairing (Connection Authorisation), page 12. Contact your authorised sales and service partner.
Possible acute STEMI Possib. acute STEMI	Technical patient alarm High priority	Result of ECG interpretation by the Glasgow algorithm. The result must always be validated by a doctor.
PR < [NUMBER]/min PR > [NUMBER]/min	Physiological patient alarm High priority	The measured pulse rate exceeds/falls below the upper/lower alarm limit. Check the patient's vital signs. Check alarm limit settings.

Alarm message	Priority	Explanation/corrective action
Printer paper jammed	System alarm Medium priority	The paper has become jammed during the printing process. Open the paper flap and remove the paper jam. To do this, pull the paper slowly and carefully forwards, close the paper flap and tear the paper off on the cutting edge. The printer speed is configured to 6.25 mm/sec and the marking indicating the end of the paper roll is visible.
Printer temp. too high Printer temp. high	System alarm Medium priority	The printing head is currently too hot and printing is not possible. Leave monitoring unit to cool down, if possible.
Printer voltage too low Printer volt. low	System alarm Medium priority	Alarm message shown on the screen of the monitoring unit and patient box. The battery charge of the monitoring unit is too low or the battery is missing, so that printing is currently not possible. Charge monitoring unit or insert into a charging bracket.
Printout aborted	System alarm Medium priority	The connection between monitoring unit and patient box was interrupted during the printing process. Reduce the distance between the modules or Connect modules mechanically.
Prolonged QTc interval Prolong. QTc interv.	Technical patient alarm High priority	Result of ECG interpretation by the Glasgow algorithm. The result must always be validated by a doctor.
Radio conn. N/A Radio conn. N/A	System alarm Low priority	A radio module is faulty. The corpuls3 can only be used as a compact device with an ad-hoc connection. Contact your authorised sales and service partners.
Replace battery Replace battery	System alarm High priority	The battery has to be checked immediately and replaced, if necessary. The corpuls3 is possibly not functioning correctly and must not be used. Contact your authorised sales and service partners.
Risk of overheating [X]	System alarm High priority	"X" stands for a failure number from 1 to 2. Defibrillation was performed on the test contacts (1= in the shock paddle holder) (2= in the cable socket) too frequently in succession. Avoid further defibrillations on the test contacts.
RR < [NUMBER]/min RR > [NUMBER]/min	Physiological patient alarm High priority	The measured respiration rate exceeds or falls below the upper/lower alarm limit. Check the patient's vital signs. Check alarm limit settings.
Server access denied	System alarm Low priority	The corpuls3 does not have the necessary license to connect to the server. User name and/or password are wrong or not known to the server. Contact your authorised sales and service partners.

Alarm message	Priority	Explanation/corrective action
Server connection error	System alarm Low priority	The connection to the server has been interrupted. The server cannot be reached. The server has refused the connection. The server has not responded in time to device request. The device has not responded in time to server request. The server is not able to receive D-ECG data. The server is not able to forward the D-ECG. Internal server error.
Shock aborted	System alarm High priority	The shock could not be delivered. Check correct position of therapy electrode. Repeat shock delivery if necessary. The event is documented in the protocol. If the message persists, contact your authorised sales and service partners, there could be a hardware defect. In this case, the device has to be taken out of commission.
Significant arrhythmia Signific. arrhythmia	Technical patient alarm High priority	Result of ECG interpretation by the Glasgow algorithm. The result must always be validated by a doctor.
SIM card error	System alarm Low priority	The corpuls3 does not recognise the SIM card. Make sure that the SIM card is correctly inserted and not dirty.
SIM card locked	System alarm Low priority	If data transfer is repeated several times in spite of a wrong PIN, the SIM card will be locked. Data transfer will now no longer be possible even after entry of the correct PIN on corpuls3. Remove the SIM card from corpuls3 and replace with a clear card. A locked card can be unlocked in a mobile telephone by entering the PIN2/PUK/PUK2 (“super PIN”) (PIN: Personal Identification Number; PUK: Personal Unblocking Key). If the SIM card cannot be unlocked, first contact your mobile communications provider and then, if necessary, your authorised sales and service partner.
SpCO < [NUMBER] % SpCO > [NUMBER] %	Physiological patient alarm Medium priority	The measured carbonmonoxide level exceeds/falls below the upper/lower alarm limit. Check the patient's vital signs. Check alarm limit settings.
SpHb < [NUMBER] g/dl SpHb > [NUMBER] g/dl SpHb < [NUMBER] mmol/l SpHb > [NUMBER] mmol/l	Physiological patient alarm Medium priority	The measured haemoglobin level exceeds/falls below the upper/lower alarm limit. Check the patient's vital signs. Check alarm limit settings.
SpMet < [NUMBER] % SpMet > [NUMBER] %	Physiological patient alarm Medium priority	The measured methaemoglobin level exceeds/falls below the upper/lower alarm limit. Check the patient's vital signs. Check alarm limit settings.
SpO2 < [NUMBER] % SpO2 > [NUMBER] %	Physiological patient alarm Medium priority	The measured oxygen saturation exceeds/falls below the upper/lower alarm limit. Check the patient's vital signs. Check alarm limit settings.

Alarm message	Priority	Explanation/corrective action
ß-SW-NOT FOR PAT. USE ß SW-NO PAT. USE	System alarm High priority	The software of the module is a beta version. Using this module on a patient is prohibited. This beta software has been released only for testing purposes, as the functions are implemented, but have not been tested completely. Contact your authorised sales and service partners.
STEMI	Technical patient alarm High priority	Configurable warning in case the ECG measurement/interpretation algorithm "corpuls ACS" detects a "STEMI" in the ECG. Check the therapy suggestion printed on the D-ECG.
STEMI possible	Technical patient alarm High priority	▪ Configurable warning in case the ECG measurement/interpretation algorithm "corpuls ACS" detects a possible "STEMI" in the ECG. Check the therapy suggestion printed on the D-ECG.
SW conflict [MODULE]	System alarm High priority	"MODULE" stands for either the monitoring unit, patient box or defibrillator/pacer. The connection authorisation (Pairing) has failed. Due to different software versions the modules cannot be connected. For further information see chapter 3.2.1 Pairing (Connection Authorisation), page 12. Contact your authorised sales and service partners.
T(X) < [NUMBER] °C T(X) > [NUMBER] °C	Physiological patient alarm Medium priority	"X" stands for a temperature channel from 1 to 2. The measured temperature exceeds/falls below the upper/lower alarm limit. Check the patient's vital signs. Check alarm limit settings.
Ther. electr. detect. error	System alarm High priority	The therapy electrodes are not connected correctly to the therapy master cable. Check the connection of the plugs and adjust if necessary. Use replacement therapy electrodes (see also chapter 5.1.1 Types of Therapy Electrodes, page 66) If the message persists, contact your authorised sales and service partners.
Time/Date invalid Time/Date inv.	System alarm Low priority	The set time or the set date are invalid. Set the correct time/date.
VT/VF possible	Technical patient alarm High priority	There is possibly an arrhythmia in form of a ventricular tachycardia (VT) or a ventricular fibrillation (VF). Analyse the ECG or perform an ECG interpretation in the AED mode.
Wrong GSM PIN	System alarm Low priority	The PIN belonging to the SIM card is unknown to the corpuls3. The SIM card in the corpuls3 was possibly replaced. Data transmission must not be repeated, to avoid that the SIM card is locked. Contact the persons responsible for the device.
Wrong therapy electrodes	System alarm High priority	In AED mode, non-suitable therapy electrodes are connected to the therapy master cable. The corpuls3 is in pacer mode and the shock paddles are connected. Connect corPatch electrodes

Table 11-1 Alarm messages, alphabetical

11.2 Troubleshooting and Corrective Actions

Automatic System Supervision Function

The device is equipped with an automatic system supervision function that continuously detects and compensates for system deviations between internal modules.

If relevant inconsistencies are detected, that can't be resolved otherwise, the affected modules will restart automatically. This restores the intended overall system functionality and module synchronization.

During this automatic restart, some functions may be temporarily unavailable. This automatic restart is a part of the system architecture.

No action is required.

1. Wait until the restart is complete.

The following table lists possible malfunctions and describes the cause of the malfunction as well as how to eliminate it. If these remedies should, against expectations, not be effective the device may be defective. Contact your authorised sales and service partners.

Malfunction	Possible cause	Explanation/corrective action
The loudspeaker of the monitoring unit is too faint or inaudible.	The loudspeaker volume has been selected too low.	Set the volume to a readily audible value (see chapter 7.3 Alarm Configuration, page 172).
	The opening of the loudspeaker is dirty.	Clean the opening of the loudspeaker.
The loudspeaker of the monitoring unit is buzzing in modular or semi-modular use.	The disconnection signal of the defibrillator/pacer unit is activated.	For information on the disconnection signal see chapter 7.4.4 Configuration of the Defibrillation Function (Persons Responsible for the Device), page 179.
The acoustic signal transmitter of the patient box is too faint or inaudible.	The acoustic signal transmitter volume has been selected too low.	Set the volume to a readily audible value (see chapter 7.3 Alarm Configuration, page 172).
	The opening of the acoustic signal transmitter is dirty.	Clean the opening of the acoustic signal transmitter.
The time is incorrectly displayed.	The time is not correctly set.	▪ Enter the time correctly (see chapter 7.1.1 General System Settings (User DEFAULT), page 154). ▪ The permanent setting can only be made by user OPERATOR.
The date is incorrectly displayed.	The date is not correctly set.	▪ Enter the date correctly (see chapter 7.1.1 General System Settings (User DEFAULT), page 154).
Time/date invalid	A date before the release of the current software was entered.	▪ Enter the date correctly (see chapter 7.4.2 General System Settings (Person responsible for the device), page 175).
Functions such as D-ECG, LT-ECG and NIBP not available (greyed softkeys).	Internal error.	▪ Switch off the corpuls3 and restart. ▪ If the problem persists, contact your authorised sales and service partners.
	Patient box and/or defibrillator/pacer are/is switched off.	▪ Switch on patient box and/or defibrillator/pacer.
LT-ECG not available.	No CompactFlash® card is inserted.	Insert CompactFlash® card correctly.
	No original CompactFlash® card inserted.	Only use original corpuls3-CompactFlash® cards.
	The CompactFlash® card is full.	Delete the data on the CompactFlash® card and re-insert.

Malfunction	Possible cause	Explanation/corrective action
corpuls3 starts with a black screen and the headline "corpuls3 Software Update Mode"	The jog dial was pressed during switching on or is blocked.	▪ Make sure that the jog dial can be turned and is not blocked. ▪ Switch off the corpuls3 by pressing the **On/Off** key for at least 8 s and restart.
Configuration export failed.	The configuration was not saved.	▪ The configuration has to be saved before exporting.
Configuration import failed.	The configuration file has been written with a different software version.	▪ Contact sales and service partners.

Table 11-2 General malfunctions

Malfunction	Possible cause	Explanation/corrective action
Error message "`No connection to Defibrillator Unit`"	The defibrillator/pacer is outside the radio range.	▪ Check if the defibrillator module is switched on. ▪ Reduce the distance between the modules or ▪ Connect modules mechanically.
	Foreign body in front of the infrared interface.	▪ Check if foreign bodies are located in front of infrared interfaces on individual modules. ▪ Remove foreign bodies. ▪ If necessary, clean the infrared interfaces.
The monitoring unit cannot be switched on (operation as a compact device).	Malfunction in the network connection. The **On/Off** key on the monitoring unit has been held down for longer than 8 s.	▪ Disconnect the monitoring unit from the defibrillator/pacer and the patient box. ▪ Check if the defibrillator/pacer and patient box are switched on. ▪ Switch on the monitoring unit again by pressing the **On/Off** key.
Modules cannot connect (operation as compact unit).	Foreign body in front of the infrared interface.	▪ Check if foreign bodies are located in front of infrared interfaces on individual modules. ▪ Remove foreign bodies. ▪ If necessary, clean the infrared interfaces. ▪ If necessary, use corpuls3 with radio connection. ▪ Contact sales and service partners.
	The connection authorisation (Pairing) does not take place (message text “Pairing failed - Retry?”)	▪ Check if all modules are switched on. ▪ Repeat pairing. ▪ If the problem persists, contact your authorised sales and service partners.
Radio connection range low. Operation of disconnected modules only possible at short range.	The radio unit in the patient box is shadowed by metallic or metallised objects, by people or body parts of the patient.	▪ The antenna of the radio unit in the patient box is located at the top. If possible, choose a position for the patient box that allows unimpeded view to the other modules. ▪ Put patient box to an upright position or use appropriate bracket. ▪ Remove metallic or metallised objects.
	Possibly a technical defect.	▪ Connect modules mechanically. ▪ Contact sales and service partners.

Table 11-3 Network malfunctions

Malfunction	Possible cause	Explanation/corrective action
Malfunction	**Possible cause**	**Explanation/corrective action**
No shock is triggered in spite of pressing the shock buttons on the shock paddles.	The shock paddle buttons were pressed too briefly.	▪ Deliver shock again. ▪ Hold the shock paddle buttons down for at least 1 second in manual defibrillation mode.
	The shock paddles are faulty.	▪ Replace the shock paddles, use corPatch electrodes in the meantime. ▪ Contact sales and service partners.
Charging the defibrillator takes too long.	State of charge of the battery is low.	▪ Connect the defibrillator to an external power supply if possible. ▪ Connect the defibrillator with the other modules to be able to access their energy reserve.
Charging the defibrillator is not possible.	The surrounding temperature is too low (< -10 °C) and the conditions “battery charge > 70%” and “operation as compact device” are not met.	▪ Keep the device sufficiently charged. ▪ At low temperatures, use the therapeutic functions only when operated as compact device.
It is not possible to trigger the shock via corPatch clip electrodes.	The corPatch clip electrodes are not properly connected.	Check the cable and plug interfaces.
Automatic electrode detection is not functional	Internal error of electrode detection	Set the electrode type manually. Perform the daily check after use. If the error persists, contact your authorised sales partner at your earliest convenience.
	No therapy electrodes connected	Connect the therapy electrodes

Table 11-4 Malfunctions during defibrillation

Malfunction	Possible cause	Explanation/corrective action
Pacing via corPatch clip electrodes is not possible.	The corPatch clip electrodes are not properly connected.	Check the cable and plug interfaces.

Table 11-5 Malfunctions during stimulation (pacer)

Malfunction	Possible cause	Explanation/corrective action
The ECG recorded via the ECG electrodes is of poor quality.	The ECG electrodes used have passed the expiry date.	Only use ECG electrodes whose expiry date printed on the packaging has not passed.
	ECG electrodes from different manufacturers are used.	Only use ECG electrodes from the same manufacturer.
	The ECG electrodes are dried out.	▪ Do not use ECG electrodes stored outside the packaging for a prolonged period or with the packaging open. ▪ Do not use ECG electrodes exposed to the sun or excessive ambient temperatures for a prolonged period. ▪ Read and follow the instructions for storage on the electrode packaging.

Malfunction	Possible cause	Explanation/corrective action
	The contact between the ECG electrodes and the patient's skin is poor.	▪ Check the contact of the electrodes on the patient's skin. In particular the green and the black electrode of the 4 pole ECG monitoring cable. ▪ Remove excessive hair from the patient's skin. ▪ Clean the sites for attaching the ECG electrodes to the skin with a substance containing alcohol. ▪ Use new ECG electrodes.
	The clip of the 4 pole ECG monitoring cable is not connected properly to the ECG electrodes.	Check the clip of the ECG cable connected to the ECG electrodes. In particular the green and the black electrode of the 4 pole ECG monitoring cable.
	In the environment are sources of electrical interference.	If possible, remove or switch off sources of electrical interference.
	ECG filter settings or mains filter not correct.	Check the ECG filter setting for monitoring and diagnostic. Check the mains filter settings.
The selected or more ECG curves are not displayed.	The contact between the ECG electrodes and the patient's skin is poor.	Check the contact of the electrodes on the patient's skin. Check in particular the ECG electrode of the curve affected.
	The clip of the ECG cable is not correctly connected to the ECG electrodes.	Connect the clip of the ECG cable to the ECG electrodes. Check in particular the ECG electrode of the curve affected.
	The ECG cable is not connected.	Plug the ECG cable into the appropriate socket (ECG-M or ECG-D).
	No signal data is received. The connection to the patient box is possibly cut off.	Check the connection status and reduce the distance between the monitoring unit and patient box or connect the modules mechanically, if necessary.
Only one single ECG curve is displayed.	The contact between the red/yellow ECG electrodes and the patient's skin is poor.	Check the contact of the electrodes on the patient's skin, in particular of the electrodes connected to the red and yellow clip of the ECG cable.
	The clip of the ECG cable is not connected properly to the red/yellow ECG electrodes.	Connect the clip of the ECG cable to the ECG electrodes. Check in particular the red and yellow clip of the ECG cable.
D-ECG printout is not legible	ECG recording impossible due to external interferences	Record the D-ECG again
HES analysis issues an error code	See Table 6-2, page 125	Record the D-ECG again
The QRS-/pulse tone is inaudible.	Acoustic reproduction of the QRS-/pulse tone is not enabled.	Press the left softkey [QRS] in monitoring mode.
	The loudspeaker of the monitoring unit is not enabled.	Activate the loudspeaker of the monitoring unit (see chapter 7.2.1 ECG Monitoring, page 165).
	The loudspeaker volume has been selected too low.	Set the volume to a readily audible value (see chapter 7.2.1 ECG Monitoring, page 165).
	The opening of the loudspeaker is dirty.	Clean the opening of the loudspeaker.

Table 11-6 Malfunctions during ECG monitoring

Malfunction	Possible cause	Explanation/corrective action
▪ The oximetry value is not displayed. ▪ The pleth curve is not displayed. ▪ The PR value is not displayed. ▪ The oximetry values are imprecise. ▪ The oximetry values appear implausible. ▪ The RRp® value (respiration rate over pleth) is not displayed.	The oximetry sensor is not correctly placed on the patient's body.	Position the oximetry sensor according to the indications in the operating instructions of the sensor manufacturer.
	The appropriate oximetry sensor is not used.	Use an oximetry sensor suitable for the patient's age and weight.
	The oximetry sensor is dirty.	Clean the oximetry sensor (see chapter 10.7.7 Oximetry sensor, page 241,).
	The measurement site on the patient is dirty or disturbed by other influences (fungal infection/nail polish).	▪ Rotate the finger sensor by 90°. ▪ Clean the measurement site (e. g. remove nail polish) ▪ Select another measurement site.
	The oximetry intermediate cable is not connected to the patient box.	Make sure that the oximetry intermediate cable is connected to the "Oximetry" socket on the patient box.
	The oximetry sensor is not connected to the oximetry intermediate cable.	Make sure that the oximetry sensor is connected to the oximetry intermediate cable.
	M-LNCS® needs a 15-pole intermediate cable.	Make sure that the oximetry sensor is compatible with the oximetry intermediate cable.
	No signal data is received. The connection to the patient box is possibly cut off.	Reduce the distance between the monitoring unit and the patient box.
	Strong ambient light disturbs the measurement (e. g. in case of strong sunshine, operating theatre lights with xenon light sources, in case of photodynamic therapy with bilirubin lamps, etc.)	Protect the oximetry sensor by using opaque material against ambient light.
	Physical movements by the patient interfere with the measurement.	Secure the oximetry sensor. Eliminate the cause on the patient's part if possible.
	Perfusion at the selected measurement site is poor.	Select another measurement site.
	The oximetry sensor is attached too tightly.	Loosen the oximetry sensor.
	Electromagnetic interferences interfere with the measurement (e. g. electrosurgical devices).	Operate the sensor at a distance from cables of electrosurgical devices if possible.
	The patient has dysfunctional haemoglobin.	Take measures according to medical indication.
	Intravascular pigments in the patient's blood interfere with the measurement (e. g. methylene blue).	Take measures according to medical indication.
	Venous pulsations interfere with the measurement.	Select another measurement site.
	The sensor is positioned on an extremity on which an inflated blood pressure cuff, an arterial catheter or an intravenous access is located.	▪ Position the sensor on another extremity. ▪ Select another measurement site.

Malfunction	Possible cause	Explanation/corrective action
	The patient has hypotension, severe anaemia or hypothermia.	Take measures according to medical indication.
	The patient has a cardiac arrest or is in shock.	Take measures according to medical indication.

Table 11-7 Malfunctions during oximetry monitoring

Malfunction	Possible cause	Explanation/corrective action
NIBP monitoring cannot be started.	The connection to the patient box is possibly cut off.	▪ Check, if the patient box is switched on. ▪ Check the connection status of the modules and reduce the distance between the monitoring unit and the patient box if necessary. ▪ When operating as compact device, check the infrared interfaces.
	The NIBP cuff and/or the hose are possibly not correctly connected.	Check if the NIBP cuff and/or the hose are correctly connected. Apply the countermeasures required if necessary.
NIBP monitoring keeps being interrupted.	The NIBP cuff is possibly trapped and cannot be inflated.	Free the extremity involved, completely remove clothing and restart monitoring.
	Excessive movement at the extremity monitored leads to artefacts in the measurement.	Make sure that the extremity involved is in the resting position during monitoring.
The NIBP measurement values do not seem plausible.	Too large/too small NIBP cuffs are being used.	Use the correct NIBP cuff size.
The NIBP cuff cannot be completely inflated.	The NIBP cuff or the hose system are possibly damaged.	Use a new NIBP cuff.
	The connection between the NIBP cuff and the patient box is possibly cut off.	▪ Check the connecting hose between the NIBP cuff and the patient box. ▪ Replace the hose if necessary.
The connecting hose of the NIBP cuff becomes loose from the patient box.	The closure of the plug has not been closed properly.	▪ Check the plug closure. ▪ Exchange the plug if defective. Use a new connecting hose.
	The closure opens when the connecting hose is moved.	▪ For those cases, a fixing ring is available as spare part. Contact your authorised sales and service partner.

Table 11-8 Malfunctions during NIBP monitoring

Malfunction	Possible cause	Explanation/corrective action
▪ In the CO_2 curve, the vital parameter fields RR and CO2, "No sensor" is displayed.	The CO_2 intermediate cable is not connected to the patient box.	Switch off the corpuls3 and connect the CO2 intermediate cable to the patient box.
	The CO2 sensor is defective.	Have the CO2 sensor replaced with a new one by the Operator.
	The CO2 intermediate cable is defective.	Have the CO2 intermediate sensor replaced with a new one by the Operator.

Malfunction	Possible cause	Explanation/corrective action
▪ The CO_2 value is not displayed. ▪ The CO_2 curve is not displayed. ▪ The RR value is not displayed.	The CO_2 sensor is not correctly positioned on the airway adapter.	Position the CO_2 sensor according to the indications in the operating instructions of the manufacturer of the sensor and airway adapter.
	The CO_2 sensor and/or airway adapter is dirty.	Clean the CO_2 sensor and airway adapter (see chapter 10.7.8 CO2 sensor, page 241).
	The CO_2 intermediate cable is not connected to the patient box.	Make sure that the CO_2 intermediate cable is connected to the "CO_2" socket on the patient box.
	The CO_2 sensor is not connected to the CO_2 intermediate cable.	Make sure that the CO_2 sensor is connected to the CO_2 intermediate cable.
	No signal data is received. The connection to the patient box is possibly cut off.	▪ Check, if the patient box is switched on. ▪ Check the connection status and reduce the distance between the monitoring unit and the patient box if necessary. ▪ When operating as compact device, check the infrared interfaces.
Warning	**No patient monitoring** The CO_2 sensor and the patient box or CO_2 sensor and intermediate cable must not be connected or disconnected during operation.	
The CO_2 curve is interrupted sporadically for a short time by a dashed line.	Self-calibration of the CO_2 module	▪ The CO_2 module performs a calibration. No action is required.
The CO_2 curve appears to be cut off at the top.	The CO_2 value is greater than the configured scaling.	▪ Set a wider scaling range.
Expiratory CO_2 cannot be detected.	Nasal tube of the nasal adapter is obstructed.	▪ When the nasal tube is obstructed with secretions, the sensor cannot detect the expiratory CO_2. ▪ Replace the nasal adapter with a new one.
	Nasal tube is removed or not properly inserted in the nostril.	▪ When the nasal tube is not properly inserted in the nostril, the sensor cannot detect the expiratory CO_2. ▪ Reattach the nasal adapter correctly.
	A nasal adapter is used for a patient exhibiting oral breathing.	▪ The nasal adapter cannot detect the orally expiratory CO_2. ▪ Use an other adapter.
	The ambient light is too bright, thereby making measurement impossible.	▪ Protect the CO_2 sensor against ambient light by using opaque material.
Measured $ETCO_2$ value is inaccurate or unstable.	The sensor has just been attached to the patient.	▪ Immediately after the attachment, the photo detector drifts due to the patient body temperature. ▪ Wait for several minutes until the photo detector temperature stabilises.

Malfunction	Possible cause	Explanation/corrective action
	Long time measurement in an extremely high humidity environment, such as humidified respiratory gas or simultaneous use of a nebuliser.	▪ In an extremely high humidity environment, the transparent membranes inside the nasal adapter are exposed to water droplets in which the moisture of the respiratory gas has condensed. The transparent membranes may get damaged and lose its anti-fogging performance because of the water droplets. This may cause unstable and/or inaccurate measurement. ▪ Periodically check the condition of the nasal adapter, and if necessary, replace the nasal adapter with a new one. ▪ Be aware that the nasal adapter cannot be used for more than 24 hours.
	Blood or mucus adheres to the transparent membranes of the nasal adapter.	▪ Not enough infrared light is transmitted through the nasal adapter airway. ▪ Replace the nasal adapter with a new one.
	Window of the photo detector and light emitter are dirty.	▪ Not enough infrared light is transmitted through the nasal adapter airway. ▪ Clean the sensor according to the user manual (see chapter 10.7.8 CO2 sensor, page 241).
	Environmental temperature changes rapidly.	▪ The output of the photo detector drifts due to the rapid temperature change. ▪ Wait until the photo detector temperature stabilises.
Measured $ETCO_2$ value is lower than the true value.	Patient breathing is very rapid and/or irregular.	The measured value may be inaccurate because the patient respiration rate is beyond the sensor performance.
	CO_2 is mixed with the inspiration (e. g. when simultaneously using hyperventilation masks).	capONE measurement is based on the assumption of no CO_2 gas in inspiration (semi-quantitative method). Therefore, when CO_2 gas mixes in the inspiration, the measured value will be lower than the true value. If the inspiration contains e. g. 1 mmHg of CO_2 gas, the measured $ETCO_2$ value will be 10% less than the true value.
	Patient's ventilatory volume is extremely low.	▪ Due to the dead space (1.2 ml), CO_2 may mix in the inspired air of patients with low ventilatory volume. ▪ capONE measurement is based on the assumption of no CO_2 gas in inspiration (semi-quantitative method). Therefore, when CO_2 gas mixes in the inspiration, the measured value will be lower than the true value.
	Measurement is performed in a low pressure environment without pressure compensation (e. g. at high altitude).	cap-ONE is affected by atmospheric pressure. For every 15 hPa decrease in pressure, the measured value is 1 mmHg lower than the true value.

<table>
<tr><th>Malfunction</th><th>Possible cause</th><th>Explanation/corrective action</th></tr>
<tr><td>Measured $ETCO_2$ value is higher than the true value.</td><td>Simultaneous use of an anaesthesia measuring instrument with volatile anaesthetic agents.</td><td>capONE is affected by volatile anaesthetic agents and produces a higher value than true value. The difference from the true value is as follows:
Gas — Concentration — Difference
Halothane — 4% — +1 mmHg
Enflurane — 5% — +1 mmHg
Isoflurane — 5% — +2 mmHg
Sevoflurane — 6% — +3 mmHg
Desflurane — 24% — +7 mmHg
Dry mixed gas with 5% (38 mmHg) CO_2- and N2-balance, under 1 kPA</td></tr>
<tr><td></td><td>N_2O anaesthesia is used.</td><td>capONE is affected by N_2O gas and produces a higher value than the true value.</td></tr>
<tr><td>Oral expiratory CO_2 is low or not detected even though the YG-121T or YG-122T nasal adapter is attached.</td><td>Oral breath collector is too far from the lip.</td><td>▪ The expiratory CO_2 cannot be effectively detected when the oral breath collector is too far from the patient's lip.
▪ Adjust the angle of the oral breath collector and keep the oral breath collector no less than 1 cm from the lower lip.</td></tr>
<tr><td></td><td>cap-ONE is attached to a patient who has a deformed mouth and exhales CO_2 from the corner of the mouth.</td><td>The oral breath collector cannot accumulate sufficient expiratory CO_2 so the expiratory CO_2 may be low or not detected.</td></tr>
<tr><td>Sensor comes off easily with body movement.</td><td>Sensor is not properly attached to the patient as shown in the user manual.</td><td>• Hook the sensor cables over both ears and slide the adjustment ring towards the patient's chin.
• Attach the nasal adapter to the nose with the provided surgical tape.</td></tr>
<tr><td></td><td>Sensor cable cannot be hooked over the ears.</td><td>Attach the sensor cables to both cheeks (if possible, on the cheek bones) with the provided surgical tape.</td></tr>
<tr><td></td><td>Surgical tape for fixing the nasal adapter cannot be attached on the nose.</td><td>Wrap the surgical tape around both sides of the cable near the nose, and attach the cable on the cheek bone with the surgical tape.</td></tr>
<tr><td>Distorted capnogram when using a nasal oxygen cannula.</td><td>Nasal oxygen cannula is inserted into the patient's nostrils.</td><td>Oxygen is directly administered into the patient's nostrils and expiratory CO_2 accumulates in the nasal tube which may distort the capnogram.
Attach the nasal oxygen cannula as shown in the user manual.</td></tr>
<tr><td></td><td>Oxygen flow rate is too high.</td><td>If the oxygen flow is too high it affects the expiratory CO_2 and distorts the capnogram, especially at the end of expiration at which the expired volume decreases.
Set the oxygen flow rate lower than 5 l/min. if there is no contraindication from a medical point of view.</td></tr>
<tr><td></td><td>Patient's ventilatory volume is extremely low.</td><td>The expiratory CO_2 is easily affected by oxygen and the capnogram may become inaccurate.</td></tr>
</table>

Malfunction	Possible cause	Explanation/corrective action
	A nasal oxygen cannula not authorised by Nihon-Kohden is used.	If oxygen is administered from an undesirable direction via a non-authorised O_2 cannula it may affect the expiratory CO_2. Use an authorised nasal oxygen cannula (e. g. oxygen cannula "V923", Nihon-Kohden, P/N MKD-O_2-capONE). ▪ For further authorised oxygen cannulae contact the manufacturer Nihon-Kohden (www.nihonkohden.com) or an corpuls sales and service partner.
Nasal oxygen cannula comes off easily.	Nasal oxygen cannula is not attached to the patient.	The oxygen cannula must be attached with surgical tape for stable measurement.
	▪ A nasal oxygen cannula not authorised by Nihon-Kohden is used. ▪ The nasal oxygen cannula might not be firmly attached to the nasal adapter.	Use an authorised nasal oxygen cannula (e. g. oxygen cannula "V923", Nihon-Kohden, P/N MKD-O_2-capONE). For further authorised oxygen cannulae contact the manufacturer Nihon-Kohden (www.nihonkohden.com) or an corpuls sales and service partner.

Table 11-9 Malfunctions during CO_2 monitoring

Malfunction	Possible cause	Explanation/corrective action
The temperature value is not displayed.	The temperature sensor is not connected to the patient box.	Make sure that the plug of the temperature sensor is connected to one of the two sockets "Temp-1" or "Temp-2".
	No signal data is received. The connection to the patient box is possibly cut off.	Check the connection status and reduce the distance between the monitoring unit and the patient box if necessary. If this error occurs when operating as compact device, check the infrared interfaces. Contact your authorised sales and service partners, if necessary.
The temperature value appears implausible.	The temperature sensor is faulty.	Replace the temperature sensor with a new one.

Table 11-10 Malfunctions during temperature monitoring

Malfunction	Possible cause	Explanation/corrective action
The invasive pressure values are not displayed. The invasive pressure curve is not displayed.	The pressure recorder (transducer) cable is not connected to the patient box.	Make sure that the cable of the pressure recorder is connected to one of the two sockets "P1 P2" or "P3 P4".
	No signal data is received. The connection to the patient box is possibly cut off.	Check the connection status and reduce the distance between the monitoring unit and the patient box if necessary.
	The pressure channel is not calibrated.	Calibrate the pressure channel.

Table 11-11 Malfunctions during IBP monitoring

Malfunction	Possible cause	Explanation/corrective action
No printout follows in spite of pressing the **Print** key.	The roll of paper in the printer is used up.	Insert a new roll.

Malfunction	Possible cause	Explanation/corrective action
	The paper has become jammed during the printing process.	Open the paper flap and pull the paper wound around the paper roller carefully off the roller with both hands. Close the paper flap and tear off the paper upwards on the cutting edge.
	The paper has become wound around the printer roller.	Open the paper flap and pull the paper wound around the paper roller carefully off the roller with both hands. Close the paper flap and tear off the paper upwards on the cutting edge.
	The paper is not correctly inserted.	Insert the paper correctly (see chapter 10.5, Fig. 10-2, page 235).
The printout is of poor quality.	The printing head is possibly dirty.	Clean the printing head carefully with an alcohol-impregnated cloth.
	The printer flap is not fully locked.	Firmly lock the printer flap on both sides (see chapter 10.5 Loading the printer paper, page 235).
	Other than original corpuls3 printer paper has been used.	To guarantee problem free functionality, only use original corpuls3 printer paper.
	The temperature of the surroundings is beyond the specified limits for the device (-5 °C to 50 °C)	The corpuls3 should not be exposed to extremely low or high temperatures for too long.
No event ECG is available on printing the protocol.	No CompactFlash® card is inserted.	Insert CompactFlash® card correctly. Only use original corpuls3-CompactFlash® cards.
	The CompactFlash® card is full.	Save the data on another data carrier and then delete the data on the CompactFlash® card and reinsert it.
	The CompactFlash® card cannot be read.	The CompactFlash® card is not formatted correctly or no original corpuls3 CompactFlash® card was used. Use a correctly formatted original corpuls3 CompactFlash® card.
	No original corpuls3 CompactFlash® card was used.	It is essential to use the original corpuls3 CompactFlash® cards for safety reasons.
When printing out the protocol, instead of parameter values there are question marks.	There are no minute mean values yet.	Print the protocol at a later point of time, if possible.
The printout contains 6 ECG curves of the DE-recording with a dashed line or dashed test signal.	The booting process of the corpuls3 is not yet finished.	Wait until the corpuls3 has booted completely.
The printer dispenses paper in an uncontrolled way.	The corpuls3 falsely assumes a paper jam.	Press the **Print** key again. If the paper dispensal cannot be stopped, open the printer flap or switch the device off and on again.
The printer flap has come loose from its lock.	Excessive use of strength when opening the printer flap.	Check if there is visible damage to the printer flap, printer roll or the hinges. If there is no visible damage, position the corpuls3 on its side and let the printer flap click into place in its guide rails carefully. If the problem persists, contact your authorised sales and service partners.
	The corpuls3 has been dropped with the printer flap open.	

Malfunction	Possible cause	Explanation/corrective action

Table 11-12 Printer malfunctions

Malfunction	Possible cause	Explanation/corrective action
corpuls3 cannot be switched on.	There is no connection to the power supply.	Connect the mains charger.
		For operation as compact device insert at least one charged battery.
	The patient box or defibrillator is already switched on.	Separate corpuls3 into its three modules and check whether the patient box or the defibrillator are switched on (see Status LEDsStatus LEDsStatus LEDs, page 38). If this is not the case, switch on the remaining devices individually.
The defibrillator/ pacer, monitoring unit, patient box cannot be switched on.	There is no connection to the power supply.	Connect the mains charger.
	No batteries are inserted or the batteries are flat.	For operation as compact device insert at least one charged battery.
Charging is not possible in spite of mechanical connection of the magnetic clip.	A foreign body is present on the magnetic contact surface (e. g. a paperclip).	Remove the foreign bodies from the contact surfaces.
The battery discharges very rapidly.	The battery shows signs of wear.	Replace the battery if necessary. If the module cannot be switched on after changing the battery, remove battery and after waiting approx. 20 seconds, insert again.

Table 11-13 Malfunctions in energy management

Malfunction	Possible cause	Explanation/corrective action
Alarm message „Check corpuls cpr“ and message „`CPR control impaired - Operate mCPR manually`“	The corpuls3 expects a BT response from the corpuls cpr, but does not get one.	• Press softkey [OK] to terminate the Bluetooth connection between the corpuls3 and the corpuls cpr and continue the therapy manually. • Re-establish the BT connection when convenient.

Table 11-14 Malfunctions during synchronised therapy with the corpuls cpr

11.3 Notifications Message Line and Information in the Protocol

The notifications marked by `- -` do not require further explanation, as they are self-explanatory. The measure to be taken is to follow the instruction given in the notification. The following notification texts can be shown on the display and/or are printed out in the protocol (in alphabetical order*):

Notification in the message line and information in the protocol	Explanation/corrective action
`(GUI_MONC) Display module will restart in ... sec!` `Module restart now!`	Restart of the monitoring unit is triggered after a countdown of 5 seconds by automatic system supervision function. The beginning of the notification text is accompanied by an alarm tone. After the 5 second countdown, the message “Module restart now!” appears and the display module is restarted. No action is required. Wait until the restart is complete.

Notification in the message line and information in the protocol	Explanation/corrective action
(W)LAN got IP [NUMBER]	Event in the protocol indicating that an IP address has been assigned to the connection.
... in progress ...	Message in the message line indicating that formatting the CF card or import or export of device configurations currently running.
[MODULE] powered on	Event in the protocol, recording the switching on of the patient box, the monitoring unit or the defibrillator/pacer.
[TEXT] marked as ([TEXT])	--
[TEXT] marker removed	--
[TEXT] user is forbidden in Demo mode	Message in the message line indicating that in demo-mode can only be run when the user is logged in at "OPERATOR" level. To log in as "DEFAULT" user when the demo-mode is running, the device has to be switched off and rebooted.
[TEXT]: Checking files	"TEXT" stands for the Mission ID
[VITAL PARAMETER] --	Event in the protocol, recording that for the vital parameter no value has yet been measured.
[VITAL PARAMETER] ?	Event in the protocol, recording that the vital parameters could not be documented.
[VITAL PARAMETER] [NUMBER] !	Event in the protocol, recording that the issued vital parameter has exceeded or fallen below an alarm limit.
[VITAL PARAMETER] [NUMBER] ?	Event in the protocol, recording that the issued vital parameter is not reliable.
[VITAL PARAMETER] [NUMBER] ?!	Event in the protocol, recording that the issued vital parameter is not reliable but also has exceeded or fallen below an alarm limit.
Abnormal ECG	Configurable warning in case the ECG measurement/interpretation algorithm "corpuls ACS" detects the presence of the Wolff-Parkinson-White (WPW) syndrome, of intraventricular excitation propagation disorders, of an implanted pacer, of QRS intervals longer than 120 ms or of a left bundle branch block in the ECG.
Acute MI / Ischemia	Result of the ECG interpretation with the Glasgow algorithm in the message line.
Acute STEMI	Result of the ECG interpretation with the Glasgow algorithm in the message line.
Ad-hoc connection [MODULE]	The Ad-hoc connection with the patient box or the defibrillator/pacer has been established.
Ad-hoc mode -Upload not possible	Message in the message line indicating that the mission(s) recorded on the CF card cannot be uploaded, because the modules of the corpuls3 have no connection authorisation (Pairing).
Alarm end;([TEXT])	Event in the protocol, recording that the alarm mentioned has ended.
Alarm suspension activated	--
Alarm suspension deactiv.	--
All locked	Indicates that the touchscreen and the keys are locked.
All unlocked	Indicates that the touchscreen and the keys are unlocked.
Already in phone book	--
Analysing heart rhythm	--
Assess heart rhythm	Spoken instruction and message in the message line after one resuscitation cycle.
Bluetooth PIN: [NUMBER]	4-digit PIN for pairing with e.g. an Ipad via Bluetooth, displayed by the device. If the PIN corresponds in both devices, pairing is possible.
Borderline acute STEMI	Result of the ECG interpretation with the Glasgow algorithm in the message line.
BT connected: [DEVICE]	Message in the message line after the connection to another Bluetooth® device has been interrupted.

Notification in the message line and information in the protocol	Explanation/corrective action
	"DEVICE" stands for a ventilator (e. g. Weinmann Medumat Transport) or another input device (e. g. a tablet PC).
`BT connected: [DEVICE]`	Message in the message line after the connection to another Bluetooth® device has been established. "DEVICE" stands for a ventilator (e. g. Weinmann Medumat Transport) or another input device (e. g. a tablet PC).
`BT connection failed`	Message in the message line after the connection to another Bluetooth® device has failed. Check the Bluetooth® connections.
`BT connection not possible`	Spoken instruction and message in the message line indicating that there is already a Bluetooth connection to a corpuls cpr. To connect to a different corpuls cpr, disconnect the existing connection and establish a new connection.
`Calibration P[NUMBER] in progress`	Message in the message line indicating that the indicated IBP channel is being calibrated.
`Calibration P[NUMBER] successful`	Message in the message line indicating that the calibration of the indicated IBP channel has been successful.
`Cancel Last`	Last entry in the event list. If this event is selected and confirmed with the jog dial, a time stamp is saved and the event "`Event recorded`" appears in the mission protocol.
`Can't read data...`	Message in the curve area in Trend mode indicating that data cannot be read.
`CF card currently not available`	Currently no data can be saved on or read from the CompactFlash® card. Check if a CompactFlash® card is inserted. In modular operation: reduce the distance between the monitoring unit and the patient box, if necessary. Connect the modules, if necessary.
`Charging`	Message in the message line that the defibrillator is being charged. Wait until the charging process is finished and the defibrillator signals readiness to shock by issuing the ready-signal.
`Charging cancelled by user`	Charging the defibrillator has been cancelled by the user with the softkey [Cancel].
`Charging not possible`	A technical error occurred. The temperature of the charging generator has exceeded a limit value due to several discharges. Leave the corpuls3 to cool down. If the problem persists, contact your authorised sales and service partners.
`Check defibrillator settings`	--
`Check energy settings of defibrillator`	--
`Check modules`	If there is no connection between the monitoring unit and the patient box and/or the defibrillator/pacer at the time of switch-off or if there is a timing problem between the modules, this is communicated to the user by a message on the display. In this case, separate the modules and check whether all modules have been shut down. If this is not so, switch off the still running modules via the respective **On/Off** key (hold down for 3 seconds).
`Check/change therapy electrodes and cable`	The therapy electrodes are not connected correctly to the therapy master cable. Check the connection of the plugs and adjust if necessary.

Notification in the message line and information in the protocol	Explanation/corrective action
	Use replacement therapy electrodes (see also chapter 5.1.1 Types of Therapy Electrodes, page 66) If the message persists, contact your authorised sales and service partners.
`Circuit open - Check pacer electrodes`	The corPatch electrodes are not connected correctly to the patient or they have a too high resistance to the patient's skin. Stimulation is not possible. Check the expiry date of the electrodes, if they are dried out and if they are placed correctly on the patient.
`Code changed`	Confirmation that the access code has been successfully changed.
`Code invalid - Retry?`	--
`Code mismatch - Retry?`	The verification of the new access code did not match the earlier entry. To repeat the process, confirm the prompt and enter the access code again.
`Configuration loaded`	--
`Configuration reset`	--
`Configuration stored`	--
`Confirm alarms`	Message in the status-/alarm line that the alarm messages contained in the following alarm list can be confirmed after the user has acknowledged them and has taken the resulting measures on the patient.
`Connect defibrillator and monitoring unit`	Message in the message line of the monitoring unit. The wireless communication between the defibrillator and the monitoring unit/patient box has been interrupted or could not be established: Make sure that the distance between the modules is not more than 10 m and that no barriers are compromising the radio connection. Use corpuls3 as a compact device if necessary.
`Connect ECG cable`	--
`Connect pacer cable`	User prompt to connect the therapy master cable to the therapy electrodes.
`Connect therapy electrodes`	Connect the corPatch electrodes or shock paddles to the therapy master cable of the corpuls3. If the alarm message persists, connect immediately the reserve corPatch electrodes.
`Connected to corpuls cpr`	--
`Connecting to server`	Status message during mission upload.
`Connection error`	Status message during mission upload.
`Continue pacing?`	User prompt to confirm the continuation of stimulation (pacer therapy).
`Copy entry?`	Confirmation prompt if the selected network configuration should be copied.
`CPR control impaired - Operate mCPR manually`	▪ The corpuls3 expects a BT response from the corpuls cpr, but does not get one. The alarm "Check corpuls cpr" appears simultaneous with the message. ➢ Press softkey [OK] to terminate the Bluetooth connection between the corpuls3 and the corpuls cpr and continue the therapy manually. ➢ Re-establish the BT connection when convenient.
`CPR depth [NUMBER]-[NUMBER] cm`	The user changed the alarm limits of the CPR depth in centimetres.
`CPR depth [NUMBER]-[NUMBER] in`	The user changed the alarm limits of the CPR depth in inches.
`CPR test failed`	Message in the message line indicating that the self-test of the CPR module has failed. Check the connections of the sensor and intermediate cable and adjust if necessary.

Notification in the message line and information in the protocol	Explanation/corrective action
	Use replacement CPR feedback sensor. If the message persists, contact your authorised sales and service partners.
`CPR test successful`	Message in the message line indicating that the self-test of the CPR sensor has been successful.
`CPR unit cm`	Event in the protocol indicating that the user has changed the displayed CPR unit to centimetres.
`CPR unit in`	Event in the protocol indicating that the user has changed the displayed CPR unit to inches.
`D-ECG ([NUMBER]) not saved ([NUMBER])`	The recorded D-ECG could not be saved because the CF card is possibly full, the CF card is possibly not inserted correctly the CF card is possibly faulty or the writing process onto the CF card has failed. After deleting or exchanging the CF card, repeat the process. If the problem persists, contact your authorised sales and service partners.
`D-ECG ([NUMBER]) saved`	Event in the protocol that a D-ECG has been saved. The number of the D-ECG is shown in brackets.
`D-ECG fax sent`	Confirmation that the fax has been successfully sent.
`D-ECG printout`	Event in the protocol, recording that a D-ECG has been printed out.
`D-ECG transmission finished`	Event in the protocol, recording that a D-ECG has been successfully sent to the server.
`D-ECG transmission has failed`	Message in the message line indicating that the transmission of the D-ECG has failed.
`D-ECG transmission started`	Event in the protocol indicating that the transmission of the D-ECG has started.
`D-ECG transmission was successful`	Message in the message line indicating that the transmission of the D-ECG has been successful.
`Defib started charging (%s%s%s%s%s)`	The defibrillator is charging up to the selected energy level. "X" stands for the selected energy level.
`Defibrillation only possible in manual mode`	User prompt to switch from AED mode to manual defibrillation mode. The therapy electrodes used are not authorised for use in AED mode.
`Defibrillator activated (AED)`	Event in the protocol that the defibrillator has been activated in AED mode.
`Defibrillator activated (Man.)`	Event in the protocol that the defibrillator has been activated in manual defibrillation mode.
`Defibrillator deactivated`	Event in the protocol, recording the leaving the defibrillator mode.
`Delete certificates?`	--
`Delete entry?`	Confirmation prompt if the selected network configuration should be deleted.
`Deleted missions:`	--
`Demo mode off`	The DEMO mode has been switched off.
`Demo mode on`	The DEMO mode has been switched on. Check if curves and parameters are displayed.
`Device is performing preShock CPR`	--

Notification in the message line and information in the protocol	Explanation/corrective action
`Disconnect defibrillator and monitoring unit`	Message in the message line of the monitoring unit. Communication in the connected state between the patient box and monitoring unit/defibrillator is cut off or could not be established: Check if one of the two infrared interfaces is covered or dirty.
`Do not touch patient`	The ECG analysis is being performed. Do not touch or move patient. Follow the instructions on the display.
`Do not touch patient - Analysing heart rhythm`	Spoken instruction and message in the message line indicating that analysis is running.
`ECG analysis result;>>> %sShock not recommended` `ECG analysis result;>>> %sShock recommended`	Event in the protocol, recording the result of the ECG analysis.
`ECG analysis started`	Event in the protocol, recording that an ECG analysis has been performed in AED mode.
`ECG FILTER ACTIVE - INTERPRETABILITY MAY BE AFFECTED`	Notice on the ECG printout that a filter was used and that the printout is not suitable for diagnosis.
`Electrode`	Entry in the shock protocol indicating which type of electrode was used for the shock: Shock paddles, corPatch electrodes, shock spoons, unknown electrodes, etc.
`Energy delivered`	Entry in the shock protocol indicating the energy level actually delivered in Joule.
`Energy selected`	Entry in the shock protocol indicating the energy level selected for the shock in Joule.
`Energy selection [NUMBER] J`	Event in the protocol, recording the energy selected.
`Enter Bluetooth PIN: [NUMBER] [NUMBER] [NUMBER] [NUMBER]`	--
`Enter code: [NUMBER] [NUMBER] [NUMBER] [NUMBER]`	User prompt to enter the access code.
`Enter new code: [NUMBER] [NUMBER] [NUMBER] [NUMBER]`	User prompt to enter a new access code.
`Error GSM module`	--
`Error in device (BIM)`	The corpuls3 is not functioning correctly and must not be used. Contact your authorised sales and service partners.
`Error in device (DEFI)`	The corpuls3 is not functioning correctly and must not be used. Contact your authorised sales and service partners.
`Error in device (MAN-BIM)`	The corpuls3 is not functioning correctly and must not be used. Contact your authorised sales and service partners.
`Event [TEXT] recorded`	Event in the protocol indicating that a pre-configured manual event (e. g. intubation, etc.) has been recorded.
`Event recorded`	--
`Export failed`	Message in the message line indicating that the export of the configuration has failed.
`Export successful`	Message in the message line indicating that the export of the configuration has been successful.
`Extreme bradycardia`	Result of the ECG interpretation with the Glasgow algorithm in the message line.

Notification in the message line and information in the protocol	Explanation/corrective action
`Extreme tachycardia`	Result of the ECG interpretation with the Glasgow algorithm in the message line.
`Fax connect. not possible`	Possibly a wrong fax number has been dialled. Repeat dialing.
`Fax transmission aborted`	Status indication during fax transmission
`Formatting CF card (State:[NUMBER])`	Event in the protocol indicating that the CF card has been formatted. "NUMBER" indicates that the formatting has been successful (1) or has failed (2). This message is only shown in monitoring mode.
`Formatting CF card failed`	Message in the message line indicating that the formatting of the CF card has failed. This message is only shown in monitoring mode.
`Formatting CF card successful`	Message in the message line indicating that the formatting of the CF card has been successful. This message is only shown in monitoring mode.
`Fully release`	Spoken instruction and message in the message line indicating that the thorax of the patient has to be released fully between the thorax compressions.
`Generic`	First entry in the event list, marked by default. If this event is selected and confirmed with the jog dial, a time stamp is saved and the event "`Event recorded`" appears in the mission protocol.
`Good compressions`	Spoken instruction and message in the message line indicating that the recommended depth of the thorax compressions has been reached or exceeded.
`Good compressions`	--
`GPRS authorisation failed`	--
`GPRS link error`	--
`GSM disconnecting`	Event in the protocol indicating the GSM connection is being terminated.
`GSM got IP connection`	--
`GSM initiation successful`	--
`GSM link detected`	Event in the protocol indicating that a GSM connection has been established.
`GSM modem at [NUMBER] baud is a [TEXT]`	Event in the protocol indicating that a modem of a certain type with a data transmission rate of x baud has been detected.
`GSM modem disabled`	--
`GSM modem IP connecting:;PLMN [NUMBER], LAC [NUMBER], cell ID [NUMBER], RSSI [NUMBER]`	Event in the protocol indicating that a GSM connection has been established and with which parameters.
`GSM network not avail.`	--
`Hardware conflict [MODULE] - Pairing impossible`	The connection authorisation (Pairing) has failed. Due to different hardware versions the modules cannot communicate via radio connection. To start an ad-hoc connection, connect the modules mechanically and do **not** confirm the message `Perform pairing?`. The modules can now communicate via the infrared interface. If the problem persists, contact your authorised sales and service partners.
`High impedance`	The electrical resistance of the patient (impedance) is to high for the selected settings. An intensity for stimulation has been selected that cannot be reached with the impedance present.

Notification in the message line and information in the protocol	Explanation/corrective action
	Make sure that the corPatch electrodes are tightly and completely attached to the patient's skin. In case of excessive hair on the patient, shave the required area on the skin. If necessary, use new corPatch electrodes. To perform a pacer therapy adaequate for the patient, a higher stimulation intensity must be selected. Perform medical measures as needed.
`Hyperbaric pressure %.1f bar`	Event in the protocol indicating that the hyperbaric compensation has been changed.
`Impedance`	Entry in the shock protocol indicating the impedance measured in Ohm.
`Import certificates?`	--
`Import failed`	--
`Import failed`	Message in the message line indicating that the import of the configuration has failed.
`Import in progress...`	--
`Import successful`	--
`Import successful - Please reboot`	Message in the message line indicating that the import of the configuration has been successful. The corpuls3 has to be switched off and rebooted.
`Impulse duration`	Entry in the shock protocol indicating the duration of the shock in milliseconds.
`Input device locked - Hold down HOME key to unlock`	Indicates that the touchscreen and/or the keys are locked.
`Keyboard locked - Hold down HOME key to unlock`	--
`Last event deleted`	Event in the protocol indicating that the last manual event has been deleted.
`Leave Demo mode - Power off?`	Message in the message line indicating that for leaving the Demo mode the corpuls3 has to be switched off.
`Lock input device?` `Lock keyboard?`	User prompt to confirm the locking of the keyboard/touchscreen.
`Mark mission as test mission?`	User prompt to confirm or prevent that the current mission is marked as a test mission.
`Max. current`	Entry in the shock protocol indicating the maximum current delivered in Ampere.
`Mean current`	Entry in the shock protocol indicating the average current delivered in Ampere.
`Meets acute STEMI criteria`	Result of the ECG interpretation with the Glasgow algorithm in the message line.
`Meets ST elevation MI criteria`	Result of the ECG interpretation with the Glasgow algorithm in the message line.
`Metronome adult [TEXT]` `Metronome child [TEXT]`	Event in the protocol, recording the switching on, switching off and the mode of the metronome.
`Mission ended`	Event in the protocol indicating the ending time of the device mission.
`Mission started`	Event in the protocol indicating the starting time of the device mission.
`Mission upload aborted`	Status message during mission upload.
`Mission upload finished`	Status message during mission upload.
`Mode`	Entry in the shock protocol indicating the defibrillation mode used for the shock: manual or AED.

Notification in the message line and information in the protocol	Explanation/corrective action
`New card [TEXT]`	An insurance card has been recognised.
`New CEB No. [NUMBER] received`	Message in the message line that a CEB® value was sent by corpuls.mission **LIVE** via webMessage.
`New code invalid - Retry?`	User prompt to re-enter the new access code, if the repetition was wrong.
`New ECGmax No. [NUMBER] received`	Message in the message line that a 22-lead ECG value was sent by corpuls.mission **LIVE** via webMessage.
`NIBP result: [NUMBER]/[NUMBER] ([NUMBER]) mmHg`	Result of the NIBP measurement in the protocol.
`NIBP R-wave gating switched off`	Event in the protocol indicating that the option R-wave Motion Tolerance (R-wave gating) has been disabled.
`NIBP R-wave gating switched on`	Event in the protocol indicating that the option R-wave Motion Tolerance (R-wave gating) has been enabled.
`No APN entered`	--
`No case number - Power off?`	Message in the message line indicating that neither the name of the patient nor a patient ID or a case number have been entered for identification of the mission/patient. The user can then enter the lacking data by pressing the softkey [Edit].
`No CF card - Upload not possible`	Message in the message line indicating that no CF card is inserted from where missions could be uploaded.
`No connection to defibrillator unit`	Message in the message line of the monitoring unit. The wireless communication between the defibrillator and the monitoring unit/patient box has been interrupted or could not be established: Make sure that the distance between the modules is not more than 10 m and that no barriers are compromising the radio connection. Use corpuls3 as a compact device if necessary. Communication in the connected state between the patient box and monitoring unit/defibrillator is cut off or could not be established: Check if one of the two infrared interfaces is covered or dirty.
`No connection to patient box`	Message in the message line of the monitoring unit. The wireless communication between the patient box and the monitoring unit/defibrillator has been interrupted or could not be established: Make sure that the distance between the modules is not more than 10 m and that no barriers are compromising the radio connection. Use corpuls3 as a compact device if necessary. Communication in the connected state between the patient box and monitoring unit/defibrillator is cut off or could not be established: Check if one of the two infrared interfaces is covered or dirty.
`No ECG cable in DEMAND mode`	For operating the pacer in DEMAND mode the 4-pole ECG monitoring cable has to be connected to the patient and to the corpuls3.
`No shock [NUMBER/TEXT] ([NUMBER] J), [NUMBER] Ohm ([TEXT])`	Event in the protocol indicating that a shock could not be delivered completely. "NUMBER" indicates, respectively, the selected energy, the actually delivered energy (in brackets) and the impedance of the patient. "TEXT" (in brackets) indicates the selected defibrillation mode: AED or manual.
`NSTEMI`	Configurable warning in case the ECG measurement/interpretation algorithm "corpuls ACS" detects a "NSTEMI" in the ECG. Check the therapy suggestion printed on the D-ECG.

Notification in the message line and information in the protocol	Explanation/corrective action
NSTEMI possible	Configurable warning in case the ECG measurement/interpretation algorithm "corpuls ACS" detects a possible "NSTEMI" in the ECG. Check the therapy suggestion printed on the D-ECG.
Pacer active - D-ECG not available	The pacer of the corpuls3 is activated and the selected intensity is more than 0 mA. A D-ECG cannot be performed under these circumstances.
Pacer error - Pacing off	An error occurred during pacer therapy. The pacer is switched off. Stimulation is interrupted. Treat patient and take measures as needed. Contact your authorised sales and service partners.
Pacer frequency [NUMBER]/min selected	Event in the protocol, recording the pacer frequency selected.
Pacer intensity [NUMBER] mA selected	Event in the protocol, recording the pacer intensity selected.
Pacer mode [TEXT] selected	Event in the protocol, recording the switch between the pacer modes FIX and DEMAND. (No alarm!)
Pacer mode activated	The pacer menu has been called up.
Pacer mode deactivated	The pacer menu has been closed.
Pacer off	Confirmation that the pacer has been switched off and is not stimulating.
Pacer pause [NUMBER]	Event in the protocol, recording how long the pacer therapy has been interrupted.
Pacing	Message in the message line that the pacer is running.
Pacing not possible	The corpuls3 is possibly not functioning correctly and must not be used. Contact your authorised sales and service partners.
Pairing failed - Retry?	The connection between the modules could not be established. The connection authorisation (Pairing) has failed. Pairing has to be performed again so that the modules can be used together. It is necessary to confirm the question if the pairing should be performed again. Confirm in order to repeat pairing. For further information see chapter 3.2.1 Pairing (Connection Authorisation), page 12. If pairing fails repeatedly, the corpuls3 is possibly not functioning correctly and must not be used. Contact your authorised sales and service partners.
Pairing in progress...	The connection authorisation is being established.
Pairing successful	The connection authorisation has been issued successfully. The modules can be used together.
Patient data accepted	The insurance card data have been accepted.
Patient data changed [TEXT]	The insurance card data have been changed. The changes have been performed manually (Man.), via the insurance card reader (KVK), via the Bluetooth interface (BT) or via corpuls.mission **LIVE** (cweb).
Patient data erased	The insurance card data have been erased.
Patient data not accepted	The insurance card data have not been accepted.
Pause	Message in the message line that the pacer therapy has been interrupted. Continue pacer therapy if necessary.
Pause pacing?	User prompt to confirm the pausing of stimulation (pacer therapy).

Notification in the message line and information in the protocol	Explanation/corrective action
`Perform CPR`	Perform cardio-pulmonary resuscitation (CPR). Follow the instructions on the screen.
`Perform pairing?`	Two modules have been connected that do not have a connection authorisation (Pairing). Start if these modules are to receive a connection authorisation and the existing connection authorisation should be deleted.
`Possible acute STEMI`	Result of the ECG interpretation with the Glasgow algorithm in the message line.
`Power off?`	User prompt to confirm the switching off of the corpuls3.
`Press Analyse`	--
`Press Analyse key or switch to manual mode`	Message in the message line appearing when the user is in AED mode and presses the **Charge** key. This key is not intended to be used in AED mode. The user should either start an analysis with the **Analyse** key or switch to manual mode.
`Press and hold down Shock key`	Message in the message line appearing when the user wants to release a shock in manual mode and the mode "`Auto Sync`" or "`Sync`" is active.
`Press shock paddle buttons again`	Press shock paddle buttons again, up to 5 times. Use replacement therapy electrodes (see also chapter 5.1.1 Types of Therapy Electrodes, page 66) If the message persists, contact your authorised sales and service partners.
`Prolonged QTc interval`	Result of the ECG interpretation with the Glasgow algorithm in the message line.
`Protocol printout`	Event in the protocol, recording that a protocol has been printed out.
`Push harder`	Spoken instruction and message in the message line indicating that the recommended depth of the thorax compressions has not been reached.
`Readiness for shock ended (%s%s%s);Defibrillator internally discharged`	Readiness for shock has ended. This occurs: • In manual mode: 30 s after readiness for shock has been reached is none of the buttons at the shock paddles has been pressed. • In AED mode: 30 s after the message "Deliver shock" appears. • If the energy level is increased via the jog dial after readiness for shock has been reached.
`Reading data...`	Message in the curve area in Trend mode indicating that data are being read.
`Reconnect therapy electrode cable`	The corpuls3 is not functioning correctly and must not be used. Contact your authorised sales and service partners.
`Recording failed - Check CF card`	Data recording is not possible. Check if the CompactFlash® card is inserted correctly.
`Re-enter new code: [NUMBER] [NUMBER] [NUMBER] [NUMBER]`	User prompt to re-enter the new access code.
`Reset code?`	Confirmation prompt asking if the access code of the user level should be reset to factory settings.
`Scan failed`	--
`Scan QR code to connect to corpuls.mission`	Message in the message line indicating that with the displayed QR code identifying the telemetry connection between the corpuls3 and corpuls.mission **LIVE**, the data from the corpuls3 can be displayed in corpuls.mission **CONFERENCE**.
`Scanning...`	--
`Select energy`	--

Notification in the message line and information in the protocol	Explanation/corrective action
`Select energy / Charge energy`	Message in the message line that the user should select another energy level or start the charging of the set energy level by pressing the **Charge** key.
`Select frequency`	--
`Select intensity`	To begin pacer therapy, select intensity.
`Select intensity/frequency`	To begin pacer therapy, select intensity and frequency.
`Select mode`	Message in the message line in pacer mode after pressing the softkey [Mode]. Select the operating mode of the pacer.
`Server connection established`	Event in the protocol indicating that the connection to the server has been established successfully.
`Server connection request`	The user has sent data/an D-ECG to the server. The selected phonebook entry, the IP address and type of connection (Fax-S, E-Mail, CWEB, CWEB AUTO) are added to the event in the protocol.
`Server disconnected`	Event in the protocol indicating that the connection to the server has been terminated.
`Server not found`	Event in the protocol indicating that the connection to the server has been lost or could not be established.
`Shock [NUMBER] J ([NUMBER] J), [NUMBER] Ohm ([TEXT])`	Time stamp and status indication of a performed defibrillation in the protocol. The selected energy, the effectively released energy (in brackets) and the impedance in Ohm are indicated. Indication of the defibrillation mode used.
`Shock [NUMBER] J ([NUMBER] J), [NUMBER] Ohm ([TEXT]); sync mode selected: [TEXT], applied:[TEXT]`	Event in the protocol indicating that a shock has been delivered. "NUMBER" indicates, respectively, the selected energy, the actually delivered energy (in brackets) and the impedance of the patient. "TEXT1" (in brackets) indicates the selected defibrillation mode: AED or manual. "TEXT2" (in brackets) indicates the selected and applied sync mode: Sync, Async or Auto.
`Shock aborted`	The shock could not be delivered. Repeat shock delivery if necessary. The event is documented in the protocol. If the message persists, contact your authorised sales and service partners, there could be a hardware defect. In this case, the device has to be taken out of commission.
`Shock aborted - Perform CPR`	--
`Shock not recommended`	The result of the ECG analysis is that a shock is not recommended. Perform medical measures as needed. If necessary, continue with cardio-pulmonary resuscitation.
`Shock performed`	Defibrillation energy has been released. Check vital signs and continue cardio-pulmonary resuscitation if necessary.
`Shock performed - Perform CPR`	--
`Shock protocol printout`	A shock protocol has been printed out.
`Short circuit - Check electrodes`	The therapy electrodes have an electric connection (short circuit). Make sure that the therapy electrodes do not touch.
`Significant arrhythmia`	Result of the ECG interpretation with the Glasgow algorithm in the message line.
`SIM card error`	--
`Software conflict [MODULE] - Separate modules`	The connection authorisation (Pairing) has failed.

Notification in the message line and information in the protocol	Explanation/corrective action
	Due to different software versions, the modules cannot be connected and have to be separated from each other. For further information see chapter 3.2.1 Pairing (Connection Authorisation), page 12. Contact your authorised sales and service partners.
`Start ECG`	Starting time of the recorded ECG in the protocol.
`STEMI`	Configurable warning in case the ECG measurement/interpretation algorithm "corpuls ACS" detects a "STEMI" in the ECG. Check the therapy suggestion printed on the D-ECG.
`STEMI possible`	Configurable warning in case the ECG measurement/interpretation algorithm "corpuls ACS" detects a possible "STEMI" in the ECG. Check the therapy suggestion printed on the D-ECG.
`Stop ECG`	--
`Storing failed`	--
`Storing successful`	--
`Switch off pacer?`	Confirmation prompt asking if the stimulation should be interrupted and the corpuls3 should switch to manual or AED defibrillation mode.
`Switch off pacer? - Power off?`	Confirmation prompt asking if the stimulation should be ended and the corpuls3 should be switched off.
`Switch off pacer? - Upload missions?`	User prompt to confirm switching off the pacer, uploading the missions and switching off the device.
`Sync mode applied`	Entry in the shock protocol indicating the sync mode (sync, async or auto) actually used for the shock.
`Sync mode selected`	Entry in the shock protocol indicating the sync mode (sync, async or auto) selected for the shock.
`Synd setting: [TEXT]`	The synd setting has been changed in manual mode to Async, Auto or Sync.
`System clock was adjusted;([NUMBER] -> [NUMBER])`	--
`System Power-down in [NUMBER] sec`	Count-down indicating the remaining time until the corpuls3 shuts down.
`Test failed`	Entry in the shock protocol.
`Test successful`	Entry in the shock protocol.
`Therapy electrodes loose`	Check all connections of the corPatch electrodes. Connect corPatch electrodes to the patient. Check contact of corPatch electrodes with skin. If necessary, re-connect all connections of the corPatch electrodes. If the alarm message persists, connect immediately the reserve corPatch electrodes.
`Time`	Entry in the shock protocol indicating the time at which the shock was released.
`To shut down device press On/Off key`	--
`Touch display locked`	Indicates that the touchscreen is locked.
`Touch display unlocked`	Indicates that the touchscreen is unlocked.

Notification in the message line and information in the protocol	Explanation/corrective action
`Transferred missions:`	--
`Twisted paddle plug`	The connectors of the therapy master cable and the therapy electrodes have been connected while turned the wrong way by 180 degrees and have to be checked for damage.
`Unlock input device?` `Unlock keyboard?`	Confirmation prompt asking if the keyboard lock should be disengaged.
`Upload missions?`	User prompt to confirm or abort the uploading of missions.
`Uploading mission [NUMBER] of [NUMBER]`	Status message during mission upload.
`User [TEXT] logged in successfully`	Message in message line and event in the protocol, at which user level the user has logged in.
`UTC offset;([NUMBER] -> [NUMBER])`	Event in the protocol, recording that the time zone settings have been changed.
`VT/VF alarm OFF`	--
`VT/VF alarm ON`	--
`webMessage opened No. [NUMBER]`	--
`webMessage opened No. [NUMBER];[TEXT]`	--
`webMessage printout No. [NUMBER]`	--
`webMessage printout No. [NUMBER];[TEXT]`	--
`webMessage received No. [NUMBER]`	--
`webMessage received No. [NUMBER];[TEXT]`	--
`Which therapy electrodes are used on the patient?`	Warning that the type of therapy electrode cannot be determined. The user has to confirm the type of electrode that is connected to the device (shock paddles, shock spoons, corPatch easy Adult or corPatch easy paediatric) by pressing the corresponding softkey. If the wrong electrode type was chosen accidentally, disconnect the therapy electrode and then connect again. The selection of the therapy electrode appears again.
`WLAN connected;[NUMBER] dB SNR, [NUMBER]`	Event in the protocol indicating that a connection has been established with a WLAN module, indicating the signal-to-noise ratio in dB and the SSID of the WLAN network.
`WLAN disconnected`	--
`WLAN module detected`	Event in the protocol indicating that a WLAN module has been detected.
`WLAN searching for networks`	--
`Wrong GSM PIN`	--

Table 11-15 Notifications in the message line and information in the protocol

Appendix

A Symbols

	Read and follow the instructions in the user manual
	Read and follow the instructions in the user manual
	Read the additional instructions in the user manual
	USB port (in preparation)
	BF (body floating, defibrillation-proof): An insulated application component of this type is approved for external and internal use on the patient
	CF (cardiac floating, defibrillation-proof) An insulated application component of this type is authorised for use directly on or in the patient's heart
	Equipotential bonding
	Protection class IP55
	APEX Marking for positioning the shock paddles on the patient and on corpuls3
	STERNUM Marking for positioning the shock paddles on the patient and on corpuls3
	LED: corpuls3 or module is charging on external power supply
	**On/Off** key

	**On/Off** key (patient box and defibrillator/pacer)
	**Home key/Input lock**
	**Back** key
	Print key
	**Event** key
	**Alarm** key
	**Multifunction** key (patient box)
	Display in parameter field: alarm enabled Display in status-/alarm line: alarm message
	Display in status-/alarm line: Alarm disabled (Covert mode)
	Display in parameter field: physiological alarm disabled
	Display in parameter field: Alarm suspended
	Clock symbol: - In the NIBP parameter field: indicates that the NIBP interval measurement is active and an automatic measurement will be performed soon. - In the message line: Marks the time of day (displayed alternating with the current mission time). - As symbol in parameter field Time.
	Symbol in parameter field Stopwatch.
	Hourglass symbol - In parameter field: Oximetry sensor is calibrated. - In the message line: Marks the current mission time (displayed alternating with the time of day).

	In the oximetry parameter field: The question mark symbol is displayed instead of the alarm symbol, if the confidence of the measured value is low.
	Display in the upper curve field: flashes in step with the QRS complex rhythm (also in blue colour for PR)
	Display in the upper curve field: flashes in step with the rhythm of an internal pacer
	Monitoring unit
	Patient box
	Defibrillator/pacer
	Battery
	QRS tone off
	QRS-/pulse tone, volume 4
	QRS-/pulse tone, volume 6
	QRS-/pulse tone, volume 8
	QRS-/pulse tone, volume 10
	Jog dial
	Jog dial, field highlighted
	Function selected (configuration dialogue)
	Lower alarm limit (configuration dialogue)
	Upper alarm limit (configuration dialogue)
	Field which can only be edited with special user authorisation (configuration dialogue). In this case: editing not possible.
	Field which can only be edited with special user authorisation (configuration dialogue). In this case: editing possible.

	Symbol for 2nd generation of radio module (hardware)
	Symbol for a 3rd generation module which is incompatible with 2nd or 1st generation modules due to hardware modifications.
	Status of the battery. Battery fully charged.
	Status of the battery. The number of bars shows the state of charge of the battery.
	Status of the battery. The number of bars shows the state of charge of the battery.
	Status of the battery. The number of bars shows the state of charge of the battery.
	Status of the battery. Battery is empty.
	Mains operation, battery is being charged
	Mains operation, battery is fully charged.
	The airplane symbol indicates that the offline mode is active.
	Flashing: the GPRS connection is being established. Permanent: GSM/GPRS connection is established.
	GSM/GPRS connection not possible. Error in GSM module (e. g. wrong PIN, no PIN configured, etc.)
	GSM/GPRS connection has been disconnected by user.
	Flashing: the LAN connection is being established. Permanent: LAN connection is established.
	LAN connection not possible.
	LAN connection has been disconnected by user.

	Flashing: the WLAN connection is being established. Permanent: WLAN connection is established. Number of bars indicates the quality of the connection.
	WLAN connection is established. Number of bars indicates the quality of the connection.
	WLAN connection is established. Number of bars indicates the quality of the connection.
	WLAN connection is established. Number of bars indicates the quality of the connection.
	WLAN connection not possible.
	WLAN connection has been disconnected by user.
	Flashing: Connection to corpuls.mission **LIVE** server is being established. Permanent: Connection to corpuls.mission **LIVE** server is established.
	Connection to corpuls.mission **LIVE** server failed.
	Permanent: Connection to corpuls.mission **LIVE** server has been disconnected by user.
	Flashing: the Bluetooth® connection is being established. Permanent: Bluetooth® connection is established (Data connection to external systems)
	Bluetooth® connection not possible.
	Bluetooth® connection has been disconnected by user.
	D-ECG transmission is running.
	D-ECG transmission was successful.
	D-ECG transmission failed.
	D-ECG transmission has been cancelled by user.
	Monitoring unit with insurance card reader (option)

	The WEEE symbol (Waste Electrical and Electronic Equipment) indicates that the device should be returned to the manufacturer for proper disposal and recycling.	
	Symbol for the separate collection of batteries	
CE 0123	CE symbol; the number indicates the competent notified body.	
	The RCM (Regulatory Compliance Mark) indicates a device's compliance with applicable ACMA (Australian Communications and Media Authority) technical standards for telecommunications, radiocommunications or broadcasting equipment.	
	Indicates that the mission contains D-ECG data.	
	Indicates that the mission contains CPR data.	
	Indicates that the mission contains defibrillation data.	
	Indicates the quality of the NIBP measurement: The quality indicator consists of 3 star symbols which indicate good measurement quality when filled, poor quality when displayed as an outline.	
	M-LNCS® needs a 15-pole intermediate cable. Make sure that the oximetry sensor is compatible with the oximetry intermediate cable.	
	Symbol for connected corpuls cpr.	
	Symbol for shock in defibrillation modes: number of shocks	
	Symbol in defibrillation modes: Time since last shock/analysis (`last`)	
	Symbol for time since defibrillation mode was launched.	
MD	Medical device	Indicates that the item is a medical device.
	Repackaging	To identify that a modification to the original medical device packaging configuration has occurred.
	Importer	Indicates the entity importing the medical device into the locale.
	Distributor	Indicates the entity distributing the medical device into the locale.

	Unique Device Identifier	Indicates a carrier that contains Unique Device Identifier information.
	Version	Displays the device software version that is used.
	Caution	Symbol on the rating plate of the battery. Handling the battery requires increased care.
	Do not heat up battery	Symbol on the rating plate of the battery. The battery may not be heated.
	Do not open or damage the battery	Symbol on the rating plate of the battery. The battery may not be damaged or opened.
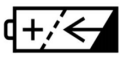	Rechargeable	Symbol on the rating plate of the battery. The device may only be operated with rechargeable batteries. The battery has to be inserted in correct polarity.
	Keep dry	Indicates a medical device that has to be protected from wetness/moisture.
	Fragile, handle with care	Indicates a medical device that can break or be damaged when handled carelessly.
	Protect from (sun)light	Indicates a medical device that has to be protected from light sources.
	Temperature limit	Indicates the temperature limit values to which the medical device can be exposed safely.
	Here is the top	To indicate correct upright position of the transport package.
	Do not re-use	Indicates a medical device that is intended for one single use only.
	Humidity limitation	Indicates the range of humidity to which the medical device can be safely exposed.
	Bisphenol A- and Bisphenol S-free, 10 years of image stability	
corpuls3 embedded Software GS Elektromedizinische Geräte G. Stemple GmbH Hauswiesenstr. 26 86916 Kaufering Germany VER X.X.X Tel.: +49 8191 65722-0 Fax: +49 8191 65722-22 e-mail: info@corpuls.com REF 99014 UDI (01)xxxxxxxxxxxx(11)yymmdd(8012)XXX	Software UDI corpuls3	

Table A-1 Symbols

B List of Abbreviations

ACS	Acute Coronary Syndrome
AMI	Anterior Myocardial Infarction
APN	Access Point Name
BPM	Beats per minute
cWEB	corpuls.mission **LIVE** server
DHCP	Dynamic Host Configuration Protocol
DNS	Domain Name System
EAP	Extensible Authentication Protocol
ePCR	Electronic Patient Care Record
ESC	European Society of Cardiology
FTP	File Transfer Protocol
FTPeS	Explicit FTP
FTPiS	Implicit FTP
GSM	Global System for Mobile Communications
GPRS	General Packet Radio Service
HES®	Hannover ECG System
IMI	Inferior Myocardial Infarction
IP	Internet Protocol
LAC	Location Area Code
LAN	Local Area Network
mCPR	Mechanical thorax compressions
NSTEMI	Non-ST-Elevation Myocardial Infarction
ORi®	Oxygen reserve index
PCI	Percutaneous Coronary Intervention
PIN	Personal Identification Number
PLMN	Public Land Mobile Network
PUK	Personal Unblocking Key
RRp®	Respiration rate over pleth
RSSI	Received Signal Strength Indication
RMT	R-wave Motion Tolerance
RTD	Realtime data, recording of vital parameter signals
SIM	Subscriber Identity Module
SSID	Service Set Identifier
STEMI	ST-Elevation Myocardial Infarction
TCP	Transmission Control Protocol
TLS	Transport Layer Security
UDP	User Datagram Protocol

Table A-2 List of Abbreviations

C Checklist Functional Check

A function check of the corpuls3 must be performed each time you start duty. The function check guarantees unrestricted function and readiness for use of the corpuls3 and is an important addition to the automatic self-tests performed internally in the corpuls3 (see also chapter 10.2 Function checks, page 226).

The following checklist serves as a suggestion for complementation of local documents.

1. Perform the function check as described in chapter 10 Maintenance and Tests, page 225.
   Tick completed checks on the checklist.

corpuls3 function checklist			
Date:	Performed by:		
Shift:	Device name or serial number:		
Location or department:			
Rescue vehicle:			
Automatic self-test:			
Visual check of the device parts and accessories.			
ECG cables (4-pole and 6-pole)		ECG electrodes	
corPatch electrodes (present and not expired)		CPR feedback sensor and intermediate cable present	
CO_2 sensor and 2 adapters		NIBP cuff and hose	
Oximetry sensor and intermediate cable		IBP transducers present	
Temperature sensor		Disposable razor	
Shock paddles (in reserve)		Intermediate cable	
Baby shock electrodes		Electrode gel	
Printer paper present in printer compartment		Spare roll of printer paper	
Function check of the device			
Charging bracket (charging active)		Printout of a screenshot	
Defibrillator (Testbox/Testload, corpuls simulator)		State of charge of modules	
Communication between modules		Telemetry (Check network connection)	
Are all the cables connected to the patient box?		"No sensor" is displayed in none of the CO2 parameter fields	
Space for comments			

Table A-3 Function checklist (sample)

D Reset to factory settings

The corpuls3 is delivered with a factory configuration to which the device can be reset at any time by the person responsible for the device.

The factory settings include general system settings, as well as pre-set views and alarm limits.

General settings

Field	Value/Setting
System	
Language	
Selection	English
Time/Date	
Autom. DST	Disabled
Screen	
Brightness	7
Dim mode	3
AutoDim	5 min
Colours	default
Manual event	
Audio recording	Disabled
Screenshot	Disabled
Access codes	
Export	Disabled
Authorisation	
Man. Defib.	Disabled
Pacer	Disabled
Mains filter	
Frequency	50 Hz
Signals - Curves	
DE	Disabled
I	Disabled
II	Disabled
II/DE	Enabled
III	Enabled
aVR	Disabled
aVL	Disabled
aVF	Disabled
-aVR	Disabled
V1	Disabled

Field	Value/Setting
V2	Disabled
V3	Disabled
V4	Disabled
V5	Disabled
V6	Disabled
Pleth	Enabled
CO_2	Enabled
CPR	Disabled
P1	Disabled
P2	Disabled
P3	Disabled
P4	Disabled
Lines	4
Signals - Parameters	
HR	Enabled
SpO_2	Enabled
PR	Enabled
Pi	Disabled
SpCO/SpHb	Disabled
SpMet	Disabled
CO_2	Enabled
RR	Disabled
CPR rate	Disabled
NIBP	Enabled
NIBP sys	Disabled
NIBP MAP	Disabled
NIBP dia	Disabled
P1	Disabled
P1 sys	Disabled
P1 MAP	Disabled
P1 dia	Disabled
P2	Disabled
P3	Disabled
P4	Disabled
T1	Disabled
T2	Disabled
Time	Disabled
Stopwatch	Disabled

Field	Value/Setting
mCPR rate	Disabled
mCPR depth	Disabled
mCPR mode	Disabled
mCPR batt.	Disabled
Settings	
Mode	Horizontal
Signals - Views	
View 1	Enabled
Printer - Curves	
Settings	
Speed	25 mm/s
AutoOff	Off
Same as screen	Enabled
Printer - Trend	
Protocol	
Trend table	Enabled
Trend curve	Enabled
Trends	
Same as screen	Enabled
Interval	5 min
Average	60 s
Printer - D-ECG	
Format	
12-lead ECG	Enabled
Rep. cycle	Enabled
Global info	Enabled
Speed	50 mm/s
ECG Format	2x6
Duration	5 s
Order	classic
Add. copy	Disabled
Glasgow Full	
Meas. table	Enabled
ECGmax/CEB	
ECGmax	Disabled
CEB	Disabled

Field	Value/Setting
Telemetry - Settings	
GSM	
Enabled	Disabled
PIN	--
GPRS	
APN	--
User	--
Password	--
LAN/W-LAN	
Enabled	Enabled
Region	DE
2.4 GHz	Enabled
5 GHz	Enabled
Telemetry - Services	
corpuls.mission	
Enabled	Enabled
Interface	Fast
TCP d. port	9956
UDP d. port	9958
Connection	Manual
Reconnect	Off
D-ECG	
Auto upload	Disabled
Fax	
Enabled	Enabled
Interface	Fast
Speed	50 mm/s
Server address	gateway.corpulsmission.com
TCP port	9857
Mission upload	
Enabled	Disabled
Interface	Fast
Type	FTP
Server address	--
Target path	--
TCP port	21
Reconnect	3
User	--

Field	Value/Setting
Password	--
Printout	Enabled
Mission storage	
Mode	None
Interval	3 days
Missions	50
Bluetooth - Settings	
Bluetooth	
Enabled	Enabled
PIN	6673
Data protect	--
Ventilator	
Events	Enabled
Trends	Enabled
Quick select	
AED	Enabled
Man. Defib.	Enabled
ECG - Settings	
Screen	
Speed	25 mm/s
Amplitude	x1
QRS marker	Enabled
Auto curve	Disabled
QRS/Pulse tone	
Enabled	Enabled
Dynamic	Disabled
Volume	4
QRS tone	Tone 2
Monitoring	
Low pass	25 Hz
High pass	0.5 Hz
20 Hz filter	
Enabled	Disabled
Diagnostic	
Low pass	150 Hz
D-ECG preview	
10s preview	Enabled

Field	Value/Setting
Therapy	
Algo.	corpuls ACS
corpuls S	
AMI	600 µV
IMI	400 µV
corpuls ACS	
NSTEMI	Disabled
ACS alarms	
STEMI	Disabled
STEMI possible	Disabled
Abnormal ECG	Disabled
NSTEMI	Disabled
NSTEMI possible	Disabled
Oximetry - Settings	
Curve	
Speed	25 mm/s
Auto curve	Enabled
QRS/Pulse tone	
Enabled	Enabled
Dynamic	Disabled
Volume	4
Pulse tone	Tone 4
Respiration rate	
Priority	CO2
Averaging	Slow
Mode	
FastSat®	Disabled
Averaging	8s
Sensitivity	Normal
SpHb	
Unit	g/dl
CO_2 - Settings	
Curve	
Speed	6.25 mm/s
Scaling	0 - 60
Auto curve	Enabled
Current unit	
Unit	mmHg

Field	Value/Setting
Respiration rate	
Priority	CO2
NIBP - Settings	
Automatic	
Interval	5 min
Enabled	Disabled
Initial mode	
Patient	Adult
Initial pressure	
Adult	180 mmHg
Child	120 mmHg
Neonate	90 mmHg
RMT	
Enabled	Enabled
IBP - Settings	
General	
Speed	12.5 mm/s
P1 - P4 curve	
Scaling	Auto
Auto curve	Enabled
Defib - Settings	
Auto energy man.	
Adult	200 J
Child	50 J
Reminder Man.	
Analyse	Enabled
Sync mode	
Auto Sync.	Enabled
Auto energy AED	
Adult	200 J
Child	50 J
Locked	Enabled
preShock CPR	
Compress.	none
Metronome	Disabled
Recording	
AED	Disabled

Field	Value/Setting
Man. Defib.	Disabled
Analyse AED	
Autostart	Disabled
Shock Protocol	
Enabled	Enabled
Disconn.-signal	
Enabled	Off
Volume	7
Tone	Tone 1
Charging tone	
AED	Disabled
Man. Defib.	Disabled
mCPR control	
Sync. Shock	Enabled
Therapy param.	Enabled
Defib – CPR Feedback	
Adult	
Compress.	100 /min
Vent. 30:2	4 s
Cont. vent.	10/min
Child	
Compress.	100 /min
Vent. 15:2	4 s
Vent. 30:2	4 s
Cont. vent.	10/min
Algorithm	
Interval	2 min
CPR cycle	Enabled
CPR depth	
Unit	cm
Release	Enabled
CPR summary	
Printout	Enabled
Application note	
Show note	Disabled
Audio AAM	
AED	Enabled
CPR Feed. Monitor	Enabled
CPR Feed. AED	Enabled

Field	Value/Setting
CPR Feed. Man.	Enabled
Volume	3
Audio metronome	
Compress. tone	3
Vent. tone	3
Autostart metr.	
AED	Off
Man. Defib	Off
Patient - Settings	
Screen/Printout/Telemetry	
Name, last name	Enabled
Address	Enabled
Date of birth	Enabled
Status	Enabled
Insuree number	Enabled
Insurance	Enabled
Insurance No.	Enabled
Card Number	Enabled
Symptom onset	Disabled
Data management	
Anonymize	Enabled
Reminder	
Case number	Disabled
Race	
Enabled	Disabled
default	--

Table A-4 General Settings

General alarm settings

Field	Value/Setting
Alarming	
Alarm OFF	120 s
Create event	Enabled
Reminder signal	Enabled
Volume (minimum and maximum for the respective alarm priority)	3 – 10: - High priority (60 dB – 85 dB) - Medium priority (53 dB – 79 dB) - Low priority (47 dB – 73 dB)

Field	Value/Setting
Alarm system	
Covert mode	Disabled
Clinic mode	Disabled
VT/VF	
Alarm	Enabled

Table A-5 General alarm settings

Pre-set Alarm Limits

Measurement value		
HR 1/min	50	120
SpO_2 %	90	-
PR 1/min	50	120
SpCO %	-	10
SpHb g/dl	10	17
SpHb mmol/l	6.2	10.6
SpMet %	-	3
CO_2 mmHg	30	50
RR 1/min	8	18
NIBP mmHg	sys 80 dia 40	sys 200 dia 100
P1 - P4 mmHg	sys 80 dia 50	sys 180 dia 100
T1 °C	34.0	39.0
T2 °C	34.0	39.0

Table A-6 Pre-set alarm limits

Pre-set Views

A selection of 6 different configured views is available:

View 1:	**Curves:**	ECG leads II/DE, III; Pleth; CO_2
	Parameters:	HR, SpO_2, PR, NIBP, CO_2 (horizontal presentation)
View 2:	**Curves:**	ECG leads II/DE, III; Pleth; CO_2
	Parameters:	HR, SpO_2, PR, NIBP, CO_2 (horizontal presentation) T1, T2 (vertical presentation)
View 3:	**Curves:**	ECG leads II/DE, III, aVR, aVL; Pleth; CO_2
	Parameters:	HR, SpO_2, PR, NIBP, CO_2 (horizontal presentation)
View 4-6:	**Curves:**	ECG leads II/DE, III; Pleth; CO_2
	Parameters:	HR, SpO_2, PR, NIBP, CO_2 (horizontal presentation)
Defibrillator	**Curves:**	ECG leads II/DE, III
	Parameters:	HR, SpO_2, PR, NIBP, CO_2 (horizontal presentation)
Pacer:	**Curves:**	ECG leads II/DE, CO_2
	Parameters:	HR, SpO_2, PR, NIBP, CO_2 (horizontal presentation)

Table A-7 Pre-set views

E Technical specifications

General Technical Specifications

Dimensions (without accessory bag, H x W x D in cm)		
Monitoring unit	29.5 x 30.5 x 12	[11.6 x 12.0 x 4.7 inches]
Patient box	13.5 x 26.5 x 5.5	[5.3 x 10.4 x 2.1 inches]
Defibrillator/pacer	29 x 30 x 19	[11.4 x 11.8. x 7.5 inches]
Defibrillator/Pacer SLIM	22 x 28 x 12	[8.7 x 11 x 4.7 inches]
Compact device	36 x 30.5 x 23	[14.1 x 12.0 x 9.0 inches]
Compact device SLIM	29.6 x 30.5 x 19.5	[11.6 x 12.0 x 7.7 inches]
Charging bracket Compact device and Defibrillator/pacer	20 x 26.5 x 8	[7.9 x 10.4 x 3.1 inches]
(Charging) bracket monitoring unit	21 x 23 x 11.5	[8.2 x 9.0 x 4.5 inches]
(Charging) bracket patient box	6.5 x 10 x 17.5	[2.5 x 3.9 x 6.9 inches]

Table A-8 Dimensions

Weight (incl. battery, without accessories in kg)	
Monitoring unit	2.7
Monitoring unit corpuls3T	2.79
Patient box	1.0 - 1.3
Defibrillator/pacer	3.7 (without shock paddles)
Defibrillator/Pacer SLIM	2.3
Compact device	7.4 (basic configuration)
Compact device SLIM	6.0 (basic configuration)

Table A-9 Weight

Environmental requirements		
Operating temperature	Defibrillator	
	-10 °C to +55 °C:	Without limitations
	-20 °C to -10 °C:	Prerequisite: battery charged more than 70% and used as compact device
	-20 °C to +55 °C:	Pacer, ECG monitor, display
	0 °C to +55 °C: NOTE	Oximetry, NIBP, temperature, IBP Application conditions depending on the accessory used, observe separate documentation
	0 °C to +45 °C:	CO_2
Battery	-20°C to +55°C	Temperature at charge
	+5°C to +50°C	Temperature at charge without limitations
	+5°C to +55°C	Temperature at charge with limitations (The batteries have an internal protection which could delay or interrupt the charging process at ambient temperatures of higher than 50°C)

Environmental requirements		
Storage temperature	Device	-40°C to +70°C
	Battery	+10°C to +30°C
Transient temperature	-20°C – 55°C	
Warm-up time	1 h 50 min (storage temperature -40°C, ambient temperature 20°C)	
Cool-down time	1 min (storage temperature +70°C, ambient temperature 20°C)	
Relative humidity	Up to 95% (without condensation)	
Protection class	IP55 (dust- and splash proof)(charging bracket excepted)	
Range of ambient pressure	Compact device	576 - 1060 hPa
	Capnometer	700 - 1060 hPa
Operating panel	Splash-proof keypad	

Table A-10 Environmental requirements

Energy management/power supply			
Internal power supply	Modules with exchangeable, chargeable battery (lithium-ion battery) All three module are equipped with identical lithium-ion batteries.		
	Battery capacity	P/N 04120.23 and 04120.823	5.7 Ah at 7.4 V Nominal voltage
	Battery size (H x W x D in cm)		4.2 x 4.6 x 7.6 [1.7 x 1.8 x 3 inches]
	Battery weight (in kg)		0.25 [0.55 lbs]
	Charge current, max. per battery		3 A
	Output current, max. per battery	P/N 04120.23 and 04120.823	• 8.8 A (continuous operation) • 10 A (for 10 s)
External power supply	Valid input voltage range		Min. 10 V, typ. 12 V, max. 14 V
	Protection of the on-board power supply, 12 V		15 A, time lag fuse (additional consumers on-board not taken into account)
	AC adapter corpuls3		
	Input voltage of the AC adapter		100 – 240 V
	Input frequency of the AC adapter		50 -60 Hz
	Output power, max.		108 W
	Nominal voltage		12 V
	Output current, max.		9 A
	Classification by protection type against electrical shock when operated via mains charger (according to IEC 60601-1): Protection class I		
Power consumption (typical) of the compact device	Max. power consumption (device operation without battery- and defibrillator charging)		20 W
	Max. Power consumption (device operation and battery charging)		100 W
	Max. Power con-sumption (device operation and defibrillator charging, 5 s ± 2 s)		108 W

Energy management/power supply		
Battery charging time	P/N 04120.23 and 04120.823; 5.7 Ah	
	0 - 80% 0 – 90% 0 - 100%	approx. 1.5 h approx. 2 h approx. 3 h
Operating time	Compact device:	9 - 13 h (depending on settings and operational demands)
	Patient box:	approx. 6-9 h
	Monitoring unit:	approx. 6 h
	Defibrillator:	approx. 200 shocks with 200 J
Maximum storage period for new rechargeable batteries (in days)	At 30% battery capacity before storage and within a temperature range from 10 °C – 30 °C	
	Battery in module	Battery outside of module
	20	400
	At 100% battery capacity before storage and within a temperature range from 10 °C – 30 °C	
	Battery in module	Battery outside of module
	60	550
	These are the optimum storage conditions for the rechargeable battery. If storage conditions differ, this may result in a reduction in the capacity of or damage to the rechargeable batteries.	
Recommended periodic battery exchange	Every 3 years	

Table A-11 Energy management/power supply



Warning

Risk of electrical shock

To avoid the risk of electric shock, connect the AC adapter only to a mains voltage supply with a protective conductor.

Alarm Management

Characteristic of alarm signal	High priority	Medium priority	Low priority	Reminder signal
Number of impulses	10	3	2	1
Impulse duration	90 ms	130 ms	190 ms	110 ms
Interval of impulses	50 ms (190 ms)	250 ms	250 ms	n/a
Frequency of impulses	523 Hz, 659 Hz, 784 Hz, 1047 Hz	523 Hz, 659 Hz, 784 Hz	523 Hz, 659 Hz	3.5 kHz
Interval	10 s	20 s	n/a	60 s
Colour of LED	Red	Yellow	Cyan	White
Flashing frequency of LED	2 Hz	0.5 Hz	n/a	n/a
Duty cycle of the LED	40% on	40% on	100% on	110 ms

Table A-12 Alarm management

The maximal delay until alarming for ECG, pulse oximetry, NIBP, IBP and CO_2 is 5 s; for temperature and perfusion index 30 s ± 3 s.
The maximal delay until alarming for loose ECG electrodes is 30 s.

Screen

	Description/Explanation
Type	8.4" colour display, transflective with 800 Cd/m^2 backlighting
Screen size, visible	Width: 171 mm [6.7 inch] Height: 128 mm [5.0 inch]
Screen definition	640 pixels horizontal, 480 pixel vertical, VGA
Angle of view	Horizontally: 160° Vertically: 140°
Backlighting	Lifetime approx. 15,000 h
Sweep speed	ECG, Pleth, IBP curve: 12.5; 25; 50 mm/s CO_2 curve: 3.13; 6.25; 12.5 mm/s
Curves	Up to 6 simultaneous curves In diagnostic ECG mode 12 simultaneous curves
Measurements	All measured values can be displayed on the screen

Table A-13 Screen

Touchscreen

	Description/Explanation
Type	Capacitive TFT touch display, protected by a protection plate 800 Cd/m^2 Backlighting
Screen size, visible	Width: 171 mm [6.75 inch]; Height: 129.8 mm [5.11 inch]
Screen definition	640 pixels horizontal, 480 pixel vertical, VGA

Table A-14 Touchscreen

Printer

	Description/Explanation
Printing method	High definition thermo printer head
Print definition	8 pixels/mm (amplitude axis); 16 pixels/mm (time axis) at 25 mm/s
Paper speed	Real-time printout: 6.25; 12.5; 25 and 50 mm/s Diagnostic ECG: 25 mm/s and 50 mm/s
Number of curves for real-time printout	1 to max. 6 curves simultaneously
Printer paper	Thermo active roll, Width 106 mm, length 22 m
Operating temperature	-5°C to 50°C

Table A-15 Printer

Character encoding

	Description/Explanation
Character encoding	UTF-8

Table A-16 Character encoding

ECG

	Description/Explanation
Amplifier input	Type CF, insulated > 5 kV, defibrillation-proof
Frequency response	0.05 bis 150 Hz (-3 dB)
Input impedance	> 100 MΩ
Common mode rejection (CMRR)	4-pole ECG monitoring cable and complementary 6-pole ECG diagnostic cable: > 90 dB
Dynamic range	± 350 mV (signal voltage) (12 Bit)
Max. electrode offset voltage	± 350 mV (input offset)
Scanning frequency	500 Hz
Digital definition	3.2 µV/Bit
Detection of implanted pacer	⩾ 20 mV/ 0.2 ms.
Suppression of pacer impulses pursuant to IEC 60601-2-27	Width 0.2 to 2.0 ms; Amplitude ±20 to ±700 mV; (no overshoot)
Electrode detection (ECG) according to IEC 60601-2-27	80 nA (maximum current)
Active noise cancellation (RL)	1 nA (maximum current)
ECG memory (1-lead recording of lead II or shock paddle ECG)	During the mission Per 60 min ECG (lead II) and trend-recording a data memory of approx. 1 MB is required Storage space is limited by the capacity of CompactFlashTM card
Event memory	All events Per manual event a data memory of approx. 324 KB, per diagnostic ECG of approx. 280 kB is required Storage space is limited by the capacity of CompactFlashTM card

Table A-17 ECG

Lead	
4-pole ECG monitoring cable	I, II, III, aVR, aVL, aVF, -aVR
4-pole ECG monitoring cable and complementary 6-pole ECG diagnostic cable	I, II, III, aVR, aVL, aVF, -aVR, and additional V1 to V6

Table A-18 Leads

Heart rate		
Heart rate display	18/min to 300/min	
Heart rate detection	Arithmetic averaging of 6 selected R-R intervals from the last 9 beats	
Accuracy	Better than ± 1 %	
Measuring deviation	Up to 100 beats per minute	± 3 beats per minute
	Over 100 beats per minute	± 3 % of the measuring value
Maximal T-wave rejection capability according to IEC 60601-2-27	0.6 mV	

Heart rate	
Accuracy of the heart rate display and comportment in case of arrhythmias according to IEC 60601-2-27	A1 Ventricular bigeminy: 80/min
	A2 Slow changing ventricular bigeminy: 60/min
	A3 Fast changing ventricular bigeminy:127/min
	A4 Bidirectional systoles: 92/min
Response time of the heart rate after changes in heart rate according to IEC 60601-2-27	Abrupt increase in heart rate after 5 s (80/min to 120/min)
	Abrupt decrease in heart rate 4 s (80/min to 40/min)
Alarm time for tachycardia according to IEC 60601-2-27	VT/VF 1 mV, 206/min: 7 s
	VT/VF 2 mV, 206/min: 7 s
	VT/VF 0.5 mV, 206/min : 9 s
	VT/VF 2 mV, 195/min: 7 s
	VT/VF 4 mV, 195/min: 7 s
	VT/VF 1 mV, 195/min: 7 s
Alarm delay	Up to 9 s

Table A-19 Heart rate



Caution

No patient monitoring

Only use recommended ECG cables, mentioned in the 'list of approved accessories' (chapter 10.8 Approved Accessories, Spare Parts and Consumables, page 242).



Caution

No patient monitoring

ECG electrodes, minimum demands:

A certificate of biocompatibility according to ISO 10993-1 is required.

The ECG electrodes must have an as short as possible recovery period after defibrillation. This must be verified by a test according to EN 60601-2-27, § 51.102. To achieve a short recovery time of the ECG after a defibrillation, only the ECG electrodes mentioned in the 'list of approved accessories' (see chapter 10.8 Approved Accessories, Spare Parts and Consumables, page 242) are recommended.

ECG with therapy electrodes

	Description/Explanation
Amplifier input	Type CF insulated > 5 kV, defibrillation-proof (corPatch electrodes) Type BF insulated > 5 kV, defibrillation-proof (shock paddles)
Frequency response	0.5 to 25 Hz (-3dB) (fixed)
Input impedance	> 10 MΩ
Common mode rejection (CMRR)	> 80dB
Dynamic range	± 10.24 mV (signal voltage)
Max. electrode offset voltage	500 mV (input offset)
Scanning frequency	400 Hz

	Description/Explanation
Digital definition	5 µV/Bit (12 Bit)
Impedance measurement DE	85 µA (42 kHz)

Table A-20 Shock paddle ECG



Caution

Risk of delayed therapy

Do not use the therapy master cable corpuls3 SLIM/corpuls1 (P/N 04326.0BA) as extension cable for the therapy master cable at the defibrillator/pacer (P/N 04300). Likewise, the therapy master cable corpuls3 SLIM/corpuls1 must not be combined with a second therapy master cable corpuls3 SLIM/corpuls1.

Defibrillator General

Output	
Insulated application (insulation voltage > 5 kV) The type is determined by the kind of shock electrodes used.	Electrodes for external defibrillation: **External shock paddles (type BF):** ▪ Shock paddles for adults ▪ Baby shock electrodes (adapter for shock paddles; energy reduction 1:10) **Disposable defibrillation/pacing electrodes (type CF):** ▪ corPatch easy electrodes **Shock spoons (type CF)**

Table A-21 Output

Conductive area		
External shock paddles	▪ Shock paddles	48.1 cm²
	▪ Baby shock electrodes	14.96 cm²
corPatch easy electrodes	▪ corPatch easy (P/N 04324.3)	approx. 81 cm²
	▪ corPatch easy paediatric (P/N 05120.3)	approx. 43 cm²
	▪ corPatch easy Pro (P/N 05120.4)	approx. 80 cm²
	▪ corPatch easy pre-connected (P/N 05102.5)	approx. 80 cm²
Shock spoons	▪ Size A	11.00 cm²
	▪ Size B	18.25 cm²
	▪ Size C 46.60 cm²	

Table A-22 Conductive area

Defibrillation, cardioversion	Description/Explanation
Charging status indicator	Display of text "**Charging**" on the screen
Ready for shock	Ready-signal and display of text "**Ready for shock**" or "**Press and hold down Shock key**" on the screen
Delay time between R-wave and shock impulse	typical 15 ms, max. 35 ms
Energy level display	In digits on the screen

Defibrillation, cardioversion	Description/Explanation
Synchronisation	▪ Manual defibrillation: Automatic and manual synchronisation as well as asynchronous defibrillation. Operation mode is displayed on screen. ▪ AED mode: always asynchronous mode
Internal discharge	▪ 0.5 s after shock release with high impedance ▪ Manual defibrillation: 30 s after reaching the status of ready for shock, if none of the shock paddle buttons has been pressed in the meantime. ▪ AED mode: 30 s after the message "`Deliver shock`" appears ▪ Termination by the user via the softkey [Cancel] or by leaving therapy mode (with **Monitor, Pacer** or **AED/Manual** key)
Test Defibrillator	Built-in test resistor for shock testing: 50 Ohm Test resistor built in cable socket and in shock paddle holder

Table A-23 Defibrillation

Biphasic defibrillator

	Description/Explanation
Energy levels for manual and AED defibrillation with shock paddles or corPatch easy electrodes and shock spoons	▪ 2, 3, 4, 5, 10, 15 to 200 J for adults ▪ 2, 3, 4, 5, 10, 15 to 100 J for children with corPatch easy electrodes Pediatric or paediatric ▪ 2, 3, 4, 5, 10, 15 to 50 J with shock spoons (only in manual defibrillation mode) ▪ Fine adjustment of energy level in steps of 5 Joules (delivered energy to 50 Ω) ▪ Interim values can be set with jog-dial Direct selection of energy levels via softkeys ▪ Adults 100 and 200 Joule ▪ Children: 50 and 100 Joule
Number of shocks per battery load (fully charged)	Approx. 200 shocks with 200 J (with the battery of the defibrillator alone)
Manual defibrillation: Charging time to max. energy (with a fully charged battery)	5 s, ± 2 s
Manual defibrillation: Charging time to max. energy after release of 15 shocks	5 s, ± 2 s (no difference to fully charged battery)
Manual defibrillation: Charging time to max. energy after switch on of corpuls3	Less than 25 s
AED mode: Max. time from start of ECG analysis to '**Ready for shock**'	Less than 12 s
AED mode: Max. time from start of ECG analysis to '**Ready for shock**' after release of 15 shocks with max. energy	Less than 12 s (no difference to fully charged battery)
AED mode: Max. time from switch on to '**Ready for shock**'	Less than 30 s

	Description/Explanation
Impulse waveform	Biphasic, positive rectangular waveform 6 ms. (90 % energy) negative rectangular waveform 4 ms. (10 % energy) (4/3 ms impulse configurable by service technician)
Patient impedance range within which a shock can be delivered	corPatch easy electrodes ⩾ 15 Ω to ⩽ 600 Ω
	Shock paddles ⩾ 15 Ω to ⩽ 600 Ω
	Shock spoons >0 Ω to ⩽ 600 Ω

Table A-24 Biphasic defibrillator

Non-invasive Pacer

	Description/Explanation
Output	Insulated application part Type BF, insulation voltage > 5 kV
Pacing frequency	▪ 30/min. to 150/min (adjustable in steps of 5/min.) ▪ in OVERDRIVE mode 30/min. to 300/min. (adjustable in steps of 1/min.)
Intensity of pacing current	0 to 150 mA (0-10 mA, then adjustable in increments of 5 mA)
Impulse duration	40 ms. (rectangular current impulse)
Operating modes	FIX and DEMAND mode and OVERDRIVE function
OVERDRIVE frequency	Heart rate of the patient minus 10/min. and if necessary rounded down to the next smaller number divisible by 5. Example: Heart rate = 179/min Overdrive frequency = 165/min
Maximum delay between synchronisation impulse and energy release	6.7 ms
Measurement mode	Oscilloscope according to IEC 60601-2-4 210.104

Table A-25 Non-invasive pacer

CPR feedback

	Description/Explanation
Function principle	Acceleration sensor
Displayed parameters	▪ Combined curve for display of compression depth and compression rate ▪ CPR rate (compression rate)
Measurement range	70 to 150 compressions per minute 1.9 cm to 10.16 cm [0.75 inches – 4.0 inches]
Measurement interval	Continuous
Operating temperature (sensor)	-10°C to +60°C
Storage temperature (sensor)	-30°C to +65°C
Relative humidity (sensor)	Up to 93% (without condensation)
Storage humidity (sensor)	Up to 93% (without condensation)
Sensor interface	Type BF, defibrillation-proof

	Description/Explanation
Sensor dimensions (H x W with foam padding)	101 mm x 64 mm [4.0 x 2.5 inches]
Sensor weight (with cable)	50.2 g
Sensor weight (without cable)	28.8 g
Accuracy	± 3 compressions per minute ± 0.635 cm [0.25 inches]

Table A-26 CPR Feedback

Storage Requirements on the CF card

	Description/Explanation
Average mission (mission length 60 min, 12-lead ECG, 1 audio recording (15 s), 1 screenshot)	Approx. 3 MB Depending on the length of a mission and the number of recorded Events and D-ECGs as well as on how many parameters are monitored, the mission files may be larger.

Table A-27 Storage requirements on the CF card

Bluetooth interface

	Description/Explanation
Version	Bluetooth Stack 2.0
Bluetooth class (Emission/Transmission power)	Class 2
Frequency band	2.4 GHz
Effective radiated power [according to IEC60601-1-2]	typ. 0 dBm = 1 mW
Modulation type	FHSS
Effective data rate	HF data rate: max. 704 kbps, Interface data rate: 9.6 kbps to 921.6 kbps

Table A-28 Bluetooth interface (option)

2G GSM/GPRS (option)

	Description/Explanation
Standard/Frequency bands	GSM/GPRS: 850/900/1800/1900 MHz
Output	33/30/30 dBm

Table A-29 2G GSM/GPRS (option)

3G GSM/GPRS/EDGE/UMTS/HSPA+ (option)

	Description/Explanation
Standard/Frequency bands	850/ 900 / 1800 / 1900 MHz (Band 1, 2, 4, 5, 8, 9, 19) UMTS/HSPA+: 900/2100 MHz GSM/EDGE: 900/1800 MHz
Output	UMTS/HSPA+: 24/24 dBm GSM/EDGE: 27/30 dBm

Table A-30 3G GSM/GPRS/EDGE/UMTS/HSPA+ (option)

4G LTE/UMTS/HSPA+/GSM/GPRS/EDGE (Option)

	Description/Explanation
Standard/Frequency bands	GSM/GPRS/EDGE: 900/1800 MHz UMTS/HSPA+: 900/2100 MHz LTE: 700/800/900/1800/2100/2600 MHz
Output	GSM: 26 / 27 / 30 dBm UMTS: 24 dBm LTE: 23 dBm

Table A-31 4G LTE (Option)

LAN-Interface (Option)

	Description/Explanation
default	IEEE 802.3/802.3u-100Base-TX/10Base-T

Table A-32 LAN interface (option)

WLAN-Interface (Option)

	Description/Explanation	
Standards	IEEE 802.11 a/b/g/n	
Preferred frequency or frequency band	Defined by Router/Access Point	
Frequency range	2412 - 2472 MHz 5180 - 5320 MHz 5500 - 5700 MHz	
Transmission power according to frequency range	2412 - 2472 MHz 5180 - 5320 MHz 5500 - 5700 MHz	19.20 mW (82.17 dBm) 17.15 mW (51.88 dBm) 18.28 mW (67.30 dBm)
Security options	WEP, WPA PSK, WPA2 PSK, WPA2 EAP-TLS	
Certificate type	.pem, .p12	

Table A-33 WLAN interface (option)

Regulations for WLAN use (in accordance with Directive 2014/53/EU for Radio Equipment) - Wireless Access Systems including Radio Local Area Networks (WAS/RLANs) - Throughout the European Union the following restrictions apply: (depending on the enabled WLAN-frequency-ranges)

1.) 2410 – 2480 MHz: NO restrictions
2.) 5150 – 5350 MHz: Restricted to indoor use
3.) 5470 - 5725 MHz: NO restrictions

Country codes for W-LAN regional settings

AU	Australia	HU	Hungary	NO	Norway
AT	Austria	IS	Iceland	PL	Poland
BE	Belgium	IN	India	PT	Portugal
BR	Brazil	ID	Indonesia	SG	Singapore
CA	Canada	IE	Ireland	SK	Slovakia

AU	Australia	HU	Hungary	NO	Norway
CN	China	IL	Israel	ZA	South Africa
CY	Cyprus	IT	Italy	ES	Spain
CZ	Czech Republic	JP	Japan	SE	Sweden
DK	Denmark	KR	Korea, Republic of	CH	Switzerland
EE	Estonia	LV	Latvia	TW	Taiwan,
FI	Finland	LT	Lithuania	TH	Thailand
FR	France	LU	Luxembourg	TR	Turkey
DE	Germany	MY	Malaysia	GB	United Kingdom
GR	Greece	NL	Netherlands	US	United States
HK	Hong Kong	NZ	New Zealand	TT	Trinidad and Tobago

Table A-34 Country codes for W-LAN regional settings

Oximetry (Option SpO_2, SpCO, SpHb, SpMet, manufacturer Masimo®)

		Description/Explanation
Amplifier		Type BF, insulated > 5 kV, defibrillation-proof
Alarm	SpO_2	Lower alarm limit: 65 to 98 % Upper alarm limit: 90 to 99 %
	PR	Lower alarm limit: 25 to 100/min Upper alarm limit: 70 to 235/min
Updating frequency of display (SpO_2, PR and Pi)		1 Hz
Band width		0.5 Hz to 6 Hz
Display range		SpO_2: 1% - 100% SpHb: 0.1 - 25 g/dl PR: 25/min - 240/min Pi: 0.02 - 20 % (disposable sensors) 0.05 - 20 % (reusable sensors) SpCO: 1% - 100% SpMet: 1% - 100% RRp 0 – 120 rpm (respirations per minute)
Calibrated measurement range		SpO_2: 70% - 100% SpHb: 8,0 – 17,0 PR: 25/min - 240/min Pi: 0.1 - 20 % SpCO: 0% - 40% SpMet: 0% – 15%
Calibration		Calibration by reference measurements by means of fractional saturation measuring on pulse oximetric haemoglobin oxygen saturation with dyshaemoglobin-free blood.

	Description/Explanation		
Definition	SpO_2: 0.1 % PR: 1/min SpCO: 0.1 % SpMet: 0.1 % SpHb: 0.1 g/dl Pi: 0.01 % RRp 1 breath per minute		
Accuracy	Oxygen saturation measurement		70% to 100%, static measurement ≦ 2% 70% to 100%, measurement in motion ≦ 3%
	Pulse rate measurement		Static measurement ≦ 3 BPM Measurement in motion ≦ 5 BPM
	SpCO		≦ 3 %
	SpHb		≦ 1.0 g/dl
	SpMet		≦ 1.0%
Accuracy (ARMS*) ARMS accuracy is a statistical calculation of the difference between device measurements and reference measurements. Approximately two-thirds of the device measurements fell within ± ARMS of the reference measurements in a controlled study.	RRp		4-70 rpm (respirations per minute), ARMS: 3 rpm (respirations per minute), 1 rpm Mean Error, adults/pediatrics
Oxygen pulse waveform	Normalised curve		
Alarm delay	SpO_2	Lower alarm limit	Up to 16 s
		Upper alarm limit	Up to 18 s
	PR	Lower alarm limit	Up to 12 s
		Upper alarm limit	Up to 17 s
	SpCO		Up to 54 s
	SpMet		Up to 59 s
	SpHb		Up to 125 s

Table A-35 Oximeter (Option SpO_2, SpCO, SpHb, SpMet, manufacturer Masimo®, Masimo SET® technology)



Caution

Only use the recommended sensors and intermediate cables. Any accessories other than those itemised in the 'list of approved accessories' (see chapter 10.8 Approved Accessories, Spare Parts and Consumables, page 242) are not permitted.

Non-invasive Blood Pressure Measurement Module NIBP (Optional, manufacturer SunTech Medical, Inc.)

	Description/Explanation
Scope of application	Adults, children, neonates and premature infants
Measurement mode	Oscillometrical principle
Measurement range	**Adults**: systolic: 40 to 260 mmHg diastolic: 20 to 200 mmHg MAP: 26 to 220 mmHg **Children** systolic: 40 to 160 mmHg diastolic: 20 to 120 mmHg MAP: 26 to 133 mmHg **Neonates**: systolic: 40 to 130 mmHg diastolic: 20 to 100 mmHg MAP: 26 to 110 mmHg
Measuring interval during automatic measurement	1, 2, 3, 5, 10, 15, 30, 60 min. duration between the start of two measurements
Measurement	Automatic/manual
Output	Application part Type BF
Pressure sensor	Semi conductor sensor
Measurement range of pressure sensor	Up to 300 mmHg
Pressure decrease rate	Varies, depending on heart rate, cuff pressure and cuff volume.
Maximum selectable initial pressure for adults	Adjustable in configuration dialogue 120 - 280 mmHg Factory settings at 160 mmHg
Maximum selectable initial pressure for children	Adjustable in configuration dialogue 80 - 170 mmHg Factory settings at 120 mmHg
Maximum selectable initial pressure for neonates	Adjustable in configuration dialogue 60 - 140 mmHg Factory settings at 90 mmHg
Screen definition	1 mmHg
Display accuracy	± 3 mmHg between 0 mmHg - 300 mmHg (in the range of 0°C - 50°C and an air humidity of 15 % - 95 %)
Maximum delay time until alarm	1.5 s
Test	According to IEC 80601-2-30:2018 Non-invasive blood pressure instruments, part 1 and part 3
Measurement range Pulse rate	30 -220 BPM (beats per minute)

Table A-36 Non-invasive blood pressure measurement module (Option NIBP, manufacturer SunTech Medical, Inc.)



Caution

Only use the recommended NIBP-cuffs and hoses. Any accessories other than those itemised in the 'list of approved accessories' (see chapter 10.8 Approved Accessories, Spare Parts and Consumables, page 242) are not permitted.

Invasive Blood Pressure Measurement Module IBP (Option)

	Description/Explanation
Amplifier	Type CF, insulated > 5 kV, defibrillation-proof
Number of interfaces	2 x 2 (4 channels at 2 interfaces)
Transducer sensitivity	5 µV/V/mmHg
Upper limit frequency	20 Hz
Scanning frequency	100 Hz per channel
Digital definition	0.5 mmHg/Bit
Measurement range	-50 to 300 mmHg
Display range (in mmHg)	Negative display range -10 to 10, -20 to 20, -30 to 30, -40 to 40, -50 to 50 Positive display range 0-30, 0-60, 0-120, 0-180, 0-300
Accuracy	The combined effects of sensitivity, repeatability, non-linearity, drifts and hysteresis are within ± 4 % of the reading taken or ± 0,5 kPa (± 4 mmHg), whichever is bigger.
Validation	Medanco® Mediserve 200
Alarm delay	Up to 13 s

Table A-37 Invasive blood pressure measurement module IBP (Option)



Caution

No patient monitoring

Only use the recommended blood pressure transducers. Any accessories other than those itemised in the 'list of approved accessories' (see chapter 10.8 Approved Accessories, Spare Parts and Consumables, page 242) are not permitted.

Option Temperature

	Description/Explanation
Amplifier	Type BF, insulated > 5 kV, defibrillation-proof
Temperature sensor	YSI 401D (rectal and oesophageal), manufacturer: YSI company
Measurement iteration	12 measurements per second
Display range	12°C to 50°C
Measurement accuracy	0.2 K
Minimum measurement time	1 min
Maintenance interval	Every 2 years (as part of the metrological checks)
Alarm delay	Up to 30 s
Measuring mode	Direct mode

Table A-38 Temperature (option)



Caution

No patient monitoring

Only use the recommended YSI probes of the 400 series or probes that are compatible with those. Any accessories other than those itemised in the 'list of approved accessories' (see chapter 10.8 Approved Accessories, Spare Parts and Consumables, page 242) are not permitted.
A certification of biocompatibility according to ISO 10993-1 is required.

Capnometer (optional, capONE, manufacturer Nihon Kohden)

	Description/Explanation	
Function principle	Semi quantitative measurement with infrared technology: This measurement mode is based on the assumption that the inhalatory air mixture does not contain any CO_2.	
Displayed parameters	▪ CO_2-concentration as filled waveform (capnogram) ▪ CO_2-value ($EtCO_2$) ▪ Respiration rate	
Measuring quantity	CO_2 partial pressure	
Measurement range	CO_2 partial pressure	0 to 100 mmHg; 0 to 13.33 kPa
	Respiration rate	Lower limit: 3 1/min Upper limit: 150 1/min
Display range	CO_2 partial pressure	1 to 100 mmHg; 0.1 to 13.33 kPa
	Respiration rate	Lower limit: 3 1/min Upper limit: 150 1/min
Screen definition	CO_2 partial pressure	1 mmHg; 0.1 kPa
Measurement interval	Continuous	
Measurement mode	Optical in mainstream mode (also suitable for sidestream applications)	
Standby time (warm-up phase)	Approx. 5 s	
Response time	Approx. 500 ms	
Operating temperature	0 - 45 °C	
Barometric pressure	70 - 106 kPa	
Automatic compensation for barometric pressure	No	
Relative humidity	30 - 95% (without condensation)	
Calibration	Automatic continuous self-calibration; no manual calibration necessary	
Sensor interface	Type BF, defibrillation-proof (EN 60601-1; IEC 60601-1)	
Sensor size (H x W x D)	22 mm x 11 mm x 11 mm	
Sensor weight (with cable)	< 40 g	
Sensor weight (without cable)	< 10 g	
Protection class	IP 54	
Diameter of the connector of airway adapter	15 mm	
Accuracy (based on an atmospheric pressure of 1 mmHg and without CO_2 in the inhaling phase)	± 4 mmHg (⩽ 40 mmHg) ± 10% of reading value (40 mmHg < CO_2 ⩽ 76 mmHg) ± 12% of reading value (76 mmHg < CO_2 ⩽ 100 mmHg)	
Accuracy (based on an atmospheric pressure of 0.13 kPa and without CO_2 in the inhaling phase)	± 0.53 kPa (⩽ 5.33 kPa) ± 10 % of reading value (5.33 kPa < CO_2 ⩽ 10.13 kPa) ± 12 % of reading value (10.13 kPa < CO_2 ⩽ 100 kPa)	
Accuracy respiration rate	1/min	
Air humidity during storage	10 to 95%, without condensation	
Alarm delay	Up to 5 s	

	Description/Explanation
Data sample rate	20 Hz
Method for calculating endtidal readings	Calculated from the maximum CO_2 partial pressure in exhalation.

Table A-39 Capnometer (Option CO_2, manufacturer Nihon Kohden, cap-ONE)

Sea level	Temperature			CO2 (mmHg)			
Pressure (hPa)	Sea level (°C)	Height (m)	Pressure (hPa)	20	40	60	100
1013.25	25	0	1013.3	20	40	60	100
		500	956.5	20.9	41.8	62.7	104.5
		1000	902.4	21.8	43.7	65.5	109.2
		1500	850.8	22.8	45.6	68.5	114.1
		2000	801.6	23.8	47.7	71.5	119.2
		2500	754.7	24.9	49.8	74.7	124.5
		3000	710.0	26.0	52.0	78.0	129.9
		3500	667.6	27.1	54.3	81.4	135.6
		4000	627.2	28.3	56.6	84.9	141.5

Table A-40 Height compensation, quantitative effect due to barometric pressure on the CO2 value

Deviations due to negative effects of gases and steam		
Gas or steam	**Concentration**	**Deviation relative to a measured CO_2 value of 38 mmHg**
Oxygen (O_2)	100%	- 1.3 mmHg
Nitrous oxide (N_2O)	80%	+ 6.5 mmHg
Halothane	4%	+ 0.6 mmHg
Enflurane	5%	+ 1.5 mmHg
Isoflurane	5%	+ 1.7 mmHg
Sevoflurane	6%	+ 2.7 mmHg
Desflurane	24%	+ 6.6 mmHg
Dry mixed gas with 5% (38 mmHg) CO_2- and N_2-balance, under 1 kPA		

Table A-41 Deviations due to negative effects of gases and steam

Disposable Adapter for CO_2 Endotracheal Tube incl. Insert for Neonates

	Description/Explanation
Length	61 mm
Max. diameter	22 mm
Weight	approx. 13.2 g
Reduction of dead space volume in the system as a whole	-1 ml (in the system as a whole)
Operating temperature	0°C to 45°C
Storage temperature	-20°C to +65°C

Table A-42 Disposable Adapter for CO_2 Endotracheal Tube incl. Insert for Neonates



Caution

No patient monitoring

Only use the recommended sensors and adapters. Any accessories other than those itemised in the 'list of approved accessories' (see chapter 10.8 Approved Accessories, Spare Parts and Consumables, page 242) are not permitted.

F Biphasic defibrillator

Shockwave

The waveform of the shockwave is comprised of a positive rectangular waveform of 6 ms. duration and a negative rectangular waveform of 4 ms. duration. The amplitude of the waveforms is adjusted automatically to the patient's impedance.

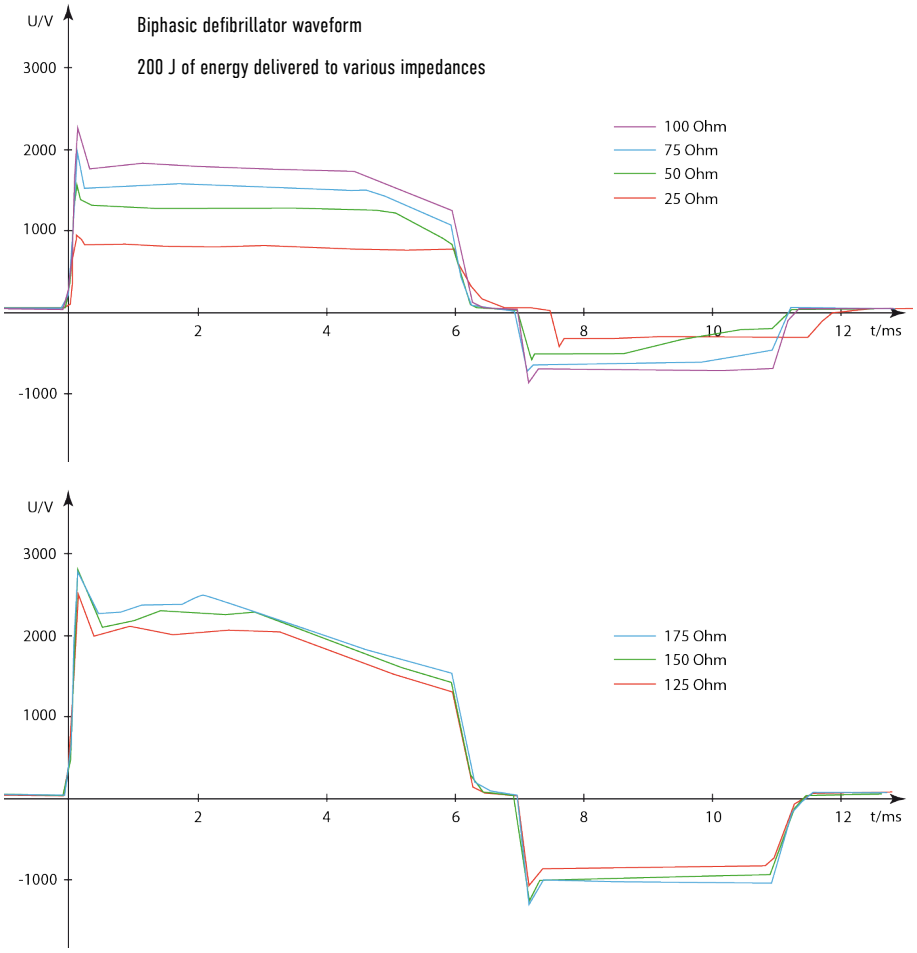

Fig. A-1 Biphasic defibrillator impulse 6/4

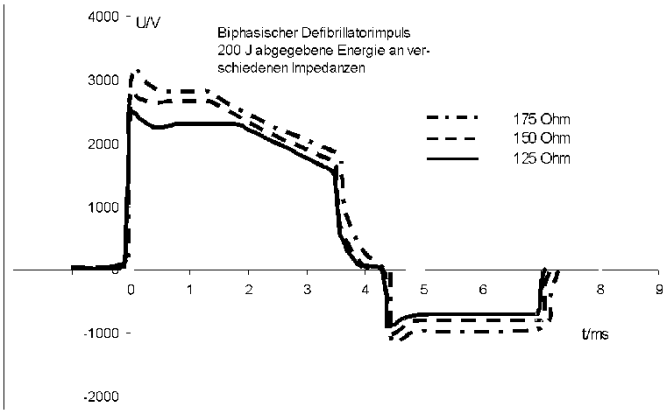

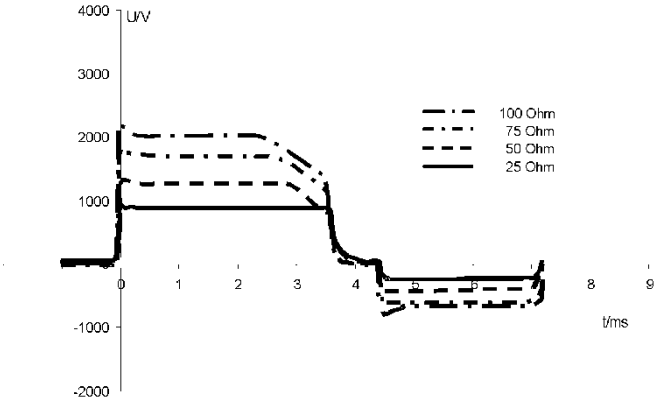

Fig. A-2 Biphasic defibrillator impulse 4/3

Note By default, the biphasic defibrillation impulse 6/4 is set. Upon request, the biphasic defibrillation impulse 4/3 can be configured by a service technician.

Pacer impulse

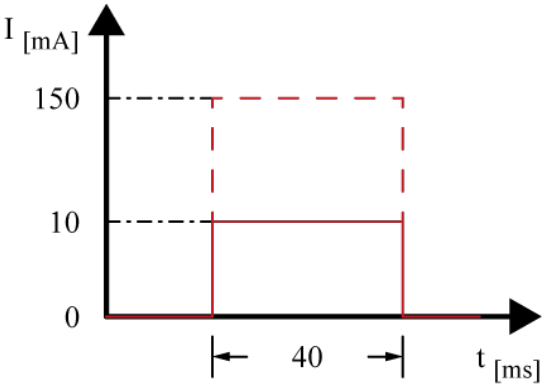

Fig. A-3 Pacer impulse

Shock Release Synchronisation

Manual defibrillation and cardioversion are automatically performed synchronously. If no R-waves are detected in the ECG (e. g. in case of fibrillation), a shock will immediately be delivered asynchronously when the shock button is pressed (shock release).

Further information regarding manual defibrillation and cardioversion can be found in chapter 5.4 Defibrillation in manual mode, page 78.



Warning

Risk of inadequate therapy

A cardioversion may lead to ventricular fibrillation or asystole. When performing a cardioversion, mind the following:

- The ECG has to be stable with a heart rate of at least 60/min.
- The synchronisation mode has to be set to SYNC.
- The QRS marks (triangles) have to mark each QRS complex. Do **NOT** rely on the QRS-/pulse tone alone.
- The shock release has to be effected according to valid guidelines.
- To release a shock, the **Shock** key at the monitoring unit or the buttons at the shock paddles have to be held down until a shock is released.

Protective Function of the Safety Shock Paddles

Every safety shock paddle possesses a protective electrode between the handle and the application electrode surface. The protective electrodes of both shock paddles are connected to one another inside corpuls3. Consequently, during defibrillation with wet or dirty shock paddles, no dangerous current can flow from one electrode over the body of the user to another electrode, since this current is diverted by the protective electrodes.

Precision of the Energy Released (6/4 Defibrillation impulse)

Selected energy in Joule	Nominal energy released in comparison to patient impedance							Precision
	Load impedance (in Ohm)							
	25	50	75	100	125	150	175	
2	1.6	2.0	1.9	2.0	1.8	1.9	1.7	± 3J
3	2.5	3.0	2.9	3.0	2.8	2.8	2.8	± 3J
4	3.2	4.1	3.9	3.8	3.8	3.8	3.6	± 3J
5	4.2	5.0	4.7	4.8	4.7	4.7	4.5	± 3J
10	8.5	10.2	9.6	9.7	9.5	9.6	8.9	± 3J
15	13.8	16.0	15.0	15.2	14.6	15.0	14.6	± 3J
20	17.6	20.8	20.0	19.9	19.4	20.0	18.9	±15%
25	22.5	26.3	25.0	24.8	24.7	24.6	23.0	±15%
30	27.4	30.7	29.3	29.2	28.2	29.0	27.0	±15%
35	32.9	36.3	34.6	34.6	34.0	34.3	31.5	±15%
40	38.0	41.4	39.9	40.3	39.2	38.8	36.5	±15%
45	42.0	46.0	44.0	44.4	43.3	43.5	40.6	±15%
50	47.8	51.7	49.9	48.9	48.4	48.0	45.4	±15%
55	51.8	56.0	54.0	53.2	52.7	52.3	49.7	±15%
60	56.2	61.0	58.4	59.3	56.9	55.7	54.2	±15%
65	61.2	65.9	63.4	65.0	62.4	62.0	58.6	±15%
70	66.0	71.5	69.0	68.9	67.3	66.8	64.1	±15%
75	69.5	76.5	72.7	74.8	72.1	71.0	67.2	±15%
80	74.8	82.2	79.0	78.8	76.1	75.4	72.2	±15%
85	79.7	87.5	82.6	83.0	80.9	79.9	76.5	±15%
90	83.7	90.9	86.7	89.0	85.6	84.7	80.6	±15%
95	88.7	96.9	92.5	93.8	90.1	89.3	84.8	±15%
100	92.3	101.8	96.8	95.9	94.7	94.2	89.6	±15%
105	97.6	106.2	101.2	101.3	99.2	98.3	93.5	±15%
110	101.9	111.1	105.7	107.8	104.4	103.3	97.3	±15%
115	107.4	116.0	111.7	112.9	108.0	108.7	103.2	±15%
120	111.5	121.4	116.2	115.3	113.7	113.0	106.4	±15%
125	116.1	127.4	121.9	122.5	119.1	117.7	111.4	±15%
130	120.6	130.3	127.6	129.2	124.2	122.5	116.4	±15%
135	124.5	135.1	130.7	133.5	127.6	127.2	120.2	±15%
140	128.7	141.7	136.9	137.0	132.5	131.3	125.2	±15%
145	133.3	145.7	141.8	141.1	136.7	135.7	129.8	±15%
150	139.9	151.8	146.1	146.7	141.9	140.6	134.1	±15%
155	142.9	155.7	151.4	151.7	146.9	144.9	138.9	±15%
160	148.1	160.3	157.9	158.3	151.4	150.3	142.9	±15%
165	151.6	166.6	161.5	161.8	153.7	153.9	147.3	±15%
170	154.8	171.2	167.1	166.8	160.8	156.8	151.1	±15%
175	160.3	175.9	169.8	172.7	166.2	164.6	156.3	±15%
180	162.0	181.5	174.8	176.2	170.6	168.3	159.9	±15%
185	164.6	184.6	180.6	182.1	175.4	173.3	164.9	±15%
190	166.7	190.9	186.2	187.2	181.8	177.6	167.0	±15%
195	168.5	195.0	188.4	188.2	181.7	180.4	172.3	±15%
200	169.3	201.4	198.0	195.8	188.9	187.3	177.1	±15%

Table A-43 Precision of the energy released (6/4 defibrillation impulse)

Precision of the Energy Released (4/3 Defibrillation impulse)

Selected energy in Joule	Nominal energy released in comparison to patient impedance							Precision
	Load impedance (in Ohm)							
	25	50	75	100	125	150	175	
2	1.7	2.1	2.0	2.0	2.0	1.9	1.7	± 3J
3	2.6	3.1	3.0	2.9	2.8	2.6	2.6	± 3J
4	3.7	4.2	4.0	3.9	3.7	3.7	3.2	± 3J
5	4.6	5.2	5.0	4.8	4.5	4.5	4.1	± 3J
10	9.4	10.5	9.9	9.6	9.0	8.9	8.4	± 3J
15	14.5	16.6	15.5	15.0	14.4	14.2	13.1	± 3J
20	19.7	21.6	20.5	19.5	18.9	18.1	17.1	±15%
25	24.5	26.4	25.1	24.6	23.2	22.2	21.0	±15%
30	29.4	31.2	30.1	29.0	27.3	26.5	24.7	±15%
35	34.4	36.3	34.7	33.5	31.3	30.3	28.8	±15%
40	38.8	42.1	39.6	38.6	36.1	34.5	32.8	±15%
45	43.6	47.2	44.3	42.5	40.5	38.9	36.5	±15%
50	48.1	52.6	49.0	47.4	44.6	43.0	40.8	±15%
55	52.7	57.4	53.5	51.9	49.0	46.8	44.0	±15%
60	57.0	62.0	57.9	56.7	53.1	50.2	47.9	±15%
65	62.3	67.3	63.1	61.0	57.8	55.7	52.2	±15%
70	66.3	72.5	67.6	66.0	62.2	59.7	56.1	±15%
75	70.8	77.8	72.6	70.6	66.2	63.8	59.9	±15%
80	75.9	82.4	77.7	75.2	69.9	68.1	63.8	±15%
85	81.0	87.5	82.5	79.2	74.8	71.5	67.9	±15%
90	84.1	92.9	86.7	83.4	79.1	76.2	71.6	±15%
95	90.0	97.2	91.5	88.7	82.6	80.3	75.4	±15%
100	94.3	102.3	95.6	93.7	87.4	84.4	79.8	±15%
105	99.3	107.8	101.7	97.4	92.5	88.5	83.8	±15%
110	103.5	112.2	105.8	101.9	97.1	92.7	87.2	±15%
115	108.0	118.2	110.6	106.9	101.2	97.0	91.3	±15%
120	112.6	122.3	115.5	111.4	104.8	100.3	95.0	±15%
125	117.3	127.8	120.6	116.3	109.5	105.3	99.1	±15%
130	122.0	131.9	125.0	121.8	113.1	109.1	102.4	±15%
135	126.9	135.1	130.5	124.8	117.8	113.8	106.6	±15%
140	129.7	142.3	134.1	129.8	122.2	116.4	111.4	±15%
145	135.2	147.4	139.7	133.6	125.9	121.7	114.1	±15%
150	140.3	152.9	144.3	138.8	130.4	124.9	120.1	±15%
155	143.7	157.1	148.5	143.4	133.9	129.9	122.0	±15%
160	149.3	162.0	154.5	147.6	140.2	134.5	126.6	±15%
165	152.8	167.4	159.0	151.5	143.9	137.0	130.3	±15%
170	155.1	173.2	162.3	157.0	146.6	142.2	132.9	±15%
175	162.0	176.8	168.0	161.4	152.8	146.2	137.7	±15%
180	164.9	182.0	171.1	166.1	157.0	150.0	141.6	±15%
185	167.3	185.8	176.7	170.1	159.9	153.4	144.8	±15%
190	168.5	191.7	182.5	174.2	164.7	157.8	150.8	±15%
195	170.2	196.9	185.4	179.5	167.7	162.5	152.9	±15%
200	170.8	202.1	192.4	183.9	173.9	167.0	156.8	±15%

Table A-44 Precision of the energy released (4/3 defibrillation impulse)

Precision of the Energy Released for Shock Spoons (6/4 Defibrillation impulse)

Selected energy in Joule	Nominal energy released in comparison to patient impedance							Precision
	Load impedance (in Ohm)							
	10	15	20	25	50	100	150	
2	1.2	1.4	1.4	1.5	2.0	1.9	1.8	± 3J
5	3.5	3.5	4.0	4.2	5.3	5.2	5.1	± 3J
10	7.8	7.4	10.6	9.1	10.6	10.2	10.2	± 3J
20	17.0	17.7	17.5	18.6	21.7	21.2	20.9	±15%
30	26.0	26.6	28.1	28.6	32.9	32.0	31.4	±15%
40	35.3	36.8	41.5	40.0	45.0	43.1	41.7	±15%
50	42.5	45.2	46.9	49.2	56.9	53.8	52.4	±15%

Table A-45 Precision of the energy released for shock spoons (6/4 defibrillation impulse)

Precision of the Energy Released for Shock Spoons (4/3 Defibrillation impulse)

Selected energy in Joule	Nominal energy released in comparison to patient impedance							Precision
	Load impedance (in Ohm)							
	10	15	20	25	50	100	150	
2	1.5	1.5	1.6	1.7	2.1	2.0	1.8	± 3J
5	3.8	4.1	4.4	4.7	5.6	5.4	5.1	± 3J
10	9.0	8.9	9.1	9.7	11.6	10.9	10.2	± 3J
20	18.8	16.7	20.5	21.1	23.8	23.2	21.5	±15%
30	28.3	28.7	30.5	31.9	36.0	34.5	32.4	±15%
40	36.5	38.1	40.5	41.8	48.0	45.3	42.5	±15%
50	46.5	48.6	50.4	52.4	60.3	56.9	52.7	±15%

Table A-46 Precision of the energy released for shock spoons (4/3 defibrillation impulse)

G Safety Information



Warning

Risk of delayed therapy

Failure to observe this safety information may result in injuries to the patient and users.

General
• The corpuls3 is not intended for operation in the vicinity of readily inflammable anaesthetics or other flammable substances, particularly in an oxygen-rich environment. • The corpuls3 must not be set up or operated under the influence of strong electromagnetic fields, as e.g. in the direct vicinity of radio masts, switched-on magnetic resonance tomography units, high voltage installations and overhead power lines. • The corpuls3 must not is operated in the vicinity of therapeutic radiation units with ionising (radioactive) radiation intended for therapeutic purposes (tumor treatment). • The pacer function must not be used near high frequency surgical devices or microwave therapy devices. • The corpuls3 may not be used simultaneously on two or more patients. • Avoid using the device in immediate vicinity of other devices or stacked with other devices, because this could lead to faulty operation. If use as described above is nevertheless necessary, observe the device and other devices to ensure correct functioning. • The manufacturer cannot accept any liability for damage occurring as a result of failure to use corpuls3 as intended. • To avoid stumbling or the patient, user or third parties being entangled in or strangled by cables, they should be led around the patient, as all medical implements. • When connecting intermediate cables and sensors, make sure there are no foreign objects between the plug connections.
Alarm function
• Do not leave the patient unattended in the following cases: - If the alarm function is deactivated or - Defibrillation mode is called up. • In case of unsupervised monitoring of vital parameters, it is recommended that you monitor a further vital parameter with another independent monitoring system. • The option for monitoring measured values may be disabled when switching on the corpuls3 (see chapter 7 Configuration, page 154). Therefore make sure that the alarms are correctly configured. • Heart rate is only monitored when **all** electrodes of the ECG monitoring cable or the corPatch electrodes are connected to the patient. • Check the settings of the alarm limits before each monitoring phase. • Set the volume of the acoustic alarm so that it cannot fail to be heard in loud environments.
Defibrillator
• Make sure that both electrode surfaces of the shock paddles are completely wetted with gel. • The shock paddles must be kept away from other electrodes and/or metal components which are in contact with the patient. • Do not touch the patient during defibrillation. • Make sure that body parts of the patient, such as uncovered skin on the head or extremities, do not touch any metal components, bed frames or a stretcher to avoid creating any unintended current paths for the defibrillation pulse. • During defibrillation with the 4-pole ECG monitoring cable connected, make sure that all electrodes are attached to the patient. • During defibrillation with self-adhesive corPatch electrodes Pediatric or paediatric energy values higher than 100 Joules are prevented by the device due to coding of the electrodes. • In patients with an implanted pacer, detection of shockable rhythms or arrhythmias by the semi-automatic defibrillator in AED mode may be limited. • The shock paddles and their handles must be cleaned thoroughly after each use. • Defibrillation with other devices is allowed, if the following security measures are taken: All electrodes of the 4 pole ECG monitoring cable and the complementary 6 pole ECG diagnostic cable connected to the corpuls3 have to be attached to the patient. Unused electrodes must not lie around (see chapter 5.3.3 Defibrillation in AED Mode with Shock Paddles, page 76 and chapter 5.4.3 Manual Defibrillation and Cardioversion with Shock Paddles, page 82). In case of shock release these represent a hazard to the user or other persons.
Pacer
• The pacer must not be operated near high frequency surgical devices or microwave therapy devices.

ECG monitor

- Conductive parts of the ECG electrodes, cables and the plug devices connected to them should not touch any conductive parts including the ground.
- Note the possible risk to the patient during use of several devices from the accumulation of leakage currents.
- To achieve as short a recovery time as possible of the ECG after defibrillation, we recommend the disposable ECG electrodes which are itemised in the list of accessories (see chapter 10.8 Approved Accessories, Spare Parts and Consumables, page 242). GS Elektromedizinische Geräte G. Stemple GmbH cannot undertake any guarantee in this respect for other disposable ECG electrodes.
- If no electrical connection exists between the patient and an electrode of the ECG monitoring cable and/or complementary ECG diagnostic cable, the corpuls3 will issue the alarm message "ECG electrode [X] `loose`". The alarm message "ECG electrode [X] `loose`" can be impaired in case of temperatures below the freezing point. If the connection to the black electrode of the 4-pole ECG monitoring cable is cut off, under certain circumstances no alarm may be given.
- A nerve stimulator – e. g. a brain pacer – can modify the ECG on the screen and printer or even completely suppress it.

Masimo SET® pulse oximeter

- General:
- The Pulse CO-Oximeter is to be operated by, or under the supervision of, qualified personnel only. The user manual, directions for use for accessories, all precautionary information, and specifications should be read before use.
- Warnings:
- As with all medical equipment, carefully route patient cabling to reduce the possibility of patient entanglement or strangulation.
- Do not place the Pulse CO-Oximeter or accessories in any position that might cause it to fall on the patient.
- Do not start or operate the Pulse CO-Oximeter unless the setup was verified to be correct.
- Do not use the Pulse CO-Oximeter during magnetic resonance imaging (MRI) or in an MRI environment.
- Do not use the Pulse CO-Oximeter if it appears or is suspected to be damaged.
- Explosion hazard: Do not use the Pulse CO-Oximeter in the presence of flammable anesthetics or other flammable substance in combination with air, oxygen-enriched environments, or nitrous oxide.
- To ensure safety, avoid stacking multiple devices or placing anything on the device during operation.
- To protect against injury, follow the directions below:
- Avoid placing the device on surfaces with visible liquid spills.
- Do not soak or immerse the device in liquids.
- Do not attempt to sterilize the device.
- Use cleaning solutions only as instructed in this user manual.
- Do not attempt to clean the device while monitoring a patient.
- To protect from electric shock, always remove the sensor and completely disconnect the Pulse CO-Oximeter before bathing the patient.
- If any measurement seems questionable, first check the patient's vital signs by alternate means and then check the Pulse COOximeter for proper functioning.
- Inaccurate respiration rate measurements may be caused by:
  - Improper sensor application
  - Low arterial perfusion
  - Motion induced artifacts
  - Low arterial oxygen saturation
  - Excessive ambient or environmental noise
- Inaccurate SpCO and SpMet readings can be caused by:
  - Improper sensor application
  - Intravascular dyes, such as indocyanine green or methylene blue
  - Abnormal hemoglobin levels
  - Low arterial perfusion
  - Low arterial oxygen saturation levels including altitude induced hypoxemia
  - Elevated total bilirubin levels
  - Motion induced artifacts
- Inaccurate SpHb and SpOC readings may be caused by:
  - Improper sensor application
  - Intravascular dyes, such as indocyanine green or methylene blue
  - Externally applied coloring and texture, such as nail polish, acrylic nails, glitter, etc.
  - Elevated PaO2 levels
  - Elevated levels of bilirubin
  - Low arterial perfusion

- Motion induced artifacts
- Low arterial oxygen saturation levels
- Elevated carboxyhemoglobin levels
- Elevated methemoglobin levels
- Hemoglobinopathies and synthesis disorders such as thalassemias, Hb s, Hb c, sickle cell, etc.
- Vasospastic disease such as Raynaud's
- Elevated altitude
- Peripheral vascular disease
- Liver disease
- EMI radiation interference

- Inaccurate SpO2 readings may be caused by:
  - Improper sensor application and placement
  - Elevated levels of COHb or MetHb: High levels of COHb or MetHb may occur with a seemingly normal SpO2. When elevated levels of COHb or MetHb are suspected, laboratory analysis (CO-Oximetry) of a blood sample should be performed.
  - Elevated levels of bilirubin
  - Elevated levels of dyshemoglobin
  - Vasospastic disease, such as Raynaud's, and peripheral vascular disease
  - Hemoglobinopathies and synthesis disorders such as thalassemias, Hb s, Hb c, sickle cell, etc.
  - Hypocapnic or hypercapnic conditions
  - Severe anemia
  - Very low arterial perfusion
  - Extreme motion artifact
  - Abnormal venous pulsation or venous constriction
  - Severe vasoconstriction or hypothermia
  - Arterial catheters and intra-aortic balloon
  - Intravascular dyes, such as indocyanine green or methylene blue
  - Externally applied coloring and texture, such as nail polish, acrylic nails, glitter, etc.
  - Birthmark(s), tattoos, skin discolorations, moisture on skin, deformed or abnormal fingers. etc.
  - Skin color disorders
  - Interfering Substances: Dyes or any substance containing dyes that change usual blood pigmentation may cause erroneous readings.
- The Pulse CO-Oximeter should not be used as the sole basis for diagnosis or therapy decisions. It must be used in conjunction with clinical signs and symptoms.
- The Pulse CO-Oximeter is not intended to be used as the sole basis for making diagnosis or treatment decisions related to suspected carbon monoxide poisoning; it is intended to be used in conjunction with additional methods of assessing clinical signs and symptoms.
- The Pulse CO-Oximeter is not an apnea monitor.
- The Pulse CO-Oximeter may be used during defibrillation, but this may affect the accuracy or availability of the parameters and measurements.
- The Pulse CO-Oximeter may be used during electrocautery, but this may affect the accuracy or availability of the parameters and measurements.
- The Pulse CO-Oximeter should not be used for arrhythmia analysis.
- SpCO readings may not be provided if there are low arterial saturation levels or elevated methemoglobin levels.
- SpO2, SpCO, SpMet, and SpHb are empirically calibrated in healthy adult volunteers with normal levels of carboxyhemoglobin (COHb) and methemoglobin (MetHb).
- Do not adjust, repair, open, disassemble, or modify the Pulse CO-Oximeter or accessories. Injury to personnel or equipment damage could occur. Return the Pulse CO-Oximeter for servicing if necessary.
- Optical, pleth-based measurements (e.g. SpO2, SpHb, SpOC, SpMet, SpCO, RRp, and ORi) can be affected by the following:
  - Improper sensor application or use of incorrect sensor.
  - Blood pressure cuff applied to the same arm as the sensor site.
  - Intravascular dyes such as indocyanine green or methylene blue.
  - Venous congestion.
  - Abnormal venous pulsations (e.g. tricuspid value regurgitation, Trendelenburg position).
  - Abnormal pulse rhythms due to physiological conditions or induced through external factors (e.g. cardiac arrhythmias, intra-aortic balloon, etc.).
  - Externally applied coloring and texture, such as nail polish, acrylic nails, glitter, etc.
  - Moisture, birthmarks, skin discoloration, nail aberration, deformed fingers, or foreign objects in the light path.
  - Elevated levels of bilirubin.

  - Physiological conditions that can significantly shift the oxygen disassociation curve.
  - A physiological condition that may affect vasomotor tone or changes in vasomotor tone.
- Inaccurate ORi readings may be caused by:
  - Low arterial perfusion.
  - Motion induced artifacts
  - Elevated COHb and/or MetHb levels.
  - Hemoglobinopathies (qualitative defects including sickle cell) and Hemoglobin synthesis disorders (Quantitative defects such as Thalassemias).
  - Hypotension, severe vasoconstriction, severe anemia, or hypothermia.
  - ORi is not intended as a replacement for SpO2 monitoring, PaO2 monitoring, or as a sole indicator of the patient condition.
- Cautions:
- Do not place the Pulse CO-Oximeter where the controls can be changed by the patient.
- Electrical shock and flammability hazard: Before cleaning, always turn off the device and disconnect from any power source.
- When patients are undergoing photodynamic therapy they may be sensitive to light sources. Pulse oximetry may be used only under careful clinical supervision for short time periods to minimize interference with photodynamic therapy.
- Do not place the Pulse CO-Oximeter on electrical equipment that may affect the device, preventing it from working properly.
- If SpO2 values indicate hypoxemia, a laboratory blood sample should be taken to confirm the patient's condition.
- If the Low Perfusion message is frequently displayed, find a better perfused monitoring site. In the interim, assess the patient and, if indicated, verify oxygenation status through other means.
- Change the application site or replace the sensor and/or patient cable when a "Replace sensor" and/or "Replace patient cable", or a persistent poor signal quality message (such as "Low SIQ") is displayed on the host monitor. These messages may indicate that patient monitoring time is exhausted on the patient cable or sensor.
- If using pulse oximetry during full body irradiation, keep the sensor out of the radiation field. If the sensor is exposed to the radiation, the reading might be inaccurate or the device might read zero for the duration of the active irradiation period.
- The device must be configured to match your local power line frequency to allow for the cancelation of noise introduced by fluorescent lights and other sources.
- To ensure that alarm limits are appropriate for the patient being monitored, check the limits each time the Pulse CO-Oximeter is used.
- Variation in hemoglobin measurements may be profound and may be affected by sampling technique as well as the patient's physiological conditions. Any results exhibiting inconsistency with the patient's clinical status should be repeated and/or supplemented with additional test data. Blood samples should be analyzed by laboratory devices prior to clinical decision making to completely understand the patient's condition.
- Do not submerge the Pulse CO-Oximeter in any cleaning solution or attempt to sterilize by autoclave, irradiation, steam, gas, ethylene oxide or any other method. This will seriously damage the Pulse CO-Oximeter.
- Disposal of product: Comply with local laws in the disposal of the device and/or its accessories.
- To minimize radio interference, other electrical equipment that emits radio frequency transmissions should not be in close proximity to the Pulse CO-Oximeter.
- Replace the cable or sensor when a replace sensor or when a low SIQ message is consistently displayed while monitoring consecutive patients after completing troubleshooting steps listed in this manual.
- ORi may not indicate additional changes in oxygen states above 200 mmHg of PaO2.
- Notes:
- A functional tester cannot be used to assess the accuracy of the Pulse CO-Oximeter.
- High-intensity extreme lights (such as pulsating strobe lights) directed on the sensor, may not allow the Pulse CO-Oximeter to obtain vital sign readings.
- The Desat Index alarm is intended as an adjunct alarm rather than in place of the Low SpO2 alarm.
- When monitoring acoustic respiration, Masimo recommends minimally monitoring both oxygenation (SpO2) and respiration (RRa).
- When using the Maximum Sensitivity setting, performance of the "Sensor Off" detection may be compromised. If the device is in this setting and the sensor becomes dislodged from the patient, the potential for false readings may occur due to environmental "noise" such as light, vibration, and excessive air movement.
- Do not loop the patient cabling into a tight coil or wrap around the device, as this can damage the patient cabling.
- Additional information specific to the Masimo sensors compatible with the pulse oximeter, including information about parameter/measurement performance during motion and low perfusion, may be found in the sensor's directions for use (DFU).
- Cables and sensors are provided with X-Cal technology to minimize the risk of inaccurate readings and unanticipated loss of patient monitoring. Refer to the Cable or Sensor DFU for the specified duration of the patient monitoring time.
- Physiological conditions that result in loss of pulsatile signal may result in no SpO2, SpHb, SpOC, SpCO, SpMet, RRp, and ORi readings.
- SpO2, SpCO and SpMet accuracy was determined by testing on healthy adult volunteers in the range of 60-100% SpO2, 0-40% SpCO, and 0-15% SpMet against a laboratory CO-Oximeter. SpO2 and SpMet accuracy was determined on 16 neonatal NICU patients ranging in age from 7-135 days old and weighing between 0.5-4.25 kg. Seventy-nine (79) data samples were collected over a range of 70-100% SaO2 and 0.5-2.5% MetHb with a resultant accuracy of 2.9% SpO2 and 0.9% SpMet.

- The Masimo sensors have been validated for no motion accuracy in human blood studies on healthy adult male and female volunteers with light to dark skin pigmentation in induced hypoxia studies in the range of 70-100% SpO2 against a laboratory CO-Oximeter and ECG monitor.
  This variation equals plus or minus one standard deviation. Plus or minus one standard deviation encompasses 68% of the population.
- The Masimo sensors have been validated for motion accuracy in human blood studies on healthy adult male and female volunteers with light to dark skin pigmentation in induced hypoxia studies in the range of 70-100% SpO2 against a laboratory CO-oximeter and ECG monitor. This variation equals plus or minus one standard deviation which encompasses 68% of the population.
- The Masimo SET Technology has been validated for low perfusion accuracy in bench top testing against a Biotek Index simulator and Masimo's simulator with signal strengths of greater than 0.02% and transmission of greater than 5% for saturations ranging from 70 to 100%.
- This variation equals plus or minus one standard deviation which encompasses 68% of the population.
- The Masimo sensors have been validated for pulse rate accuracy for the range of 25-240 bpm in bench top testing against a Biotek Index 2 simulator. This variation equals plus or minus one standard deviation which encompasses 68% of the population.
- SpHb accuracy has been validated on healthy adult male and female volunteers and on surgical patients with light to dark skin pigmentation in the range of 8-17 g/dl SpHb against a laboratory CO-oximeter. This variation equals plus or minus one standard deviation which encompasses 68% of the population. The SpHb accuracy has not been validated with motion or low perfusion.
- The following substances may interfere with pulse CO-Oximetry measurements:
  - Elevated levels of methemoglobin (MetHb) will lead to inaccurate SpO2 and SpCO measurements.
  - Elevated levels of carboxyhaemoglobin (COHb) will lead to inaccurate SpO2 measurements.
  - Very low arterial Oxygen Saturation (SpO2) levels may cause inaccurate SpCO and SpMet measurements.
  - Severe anemia may cause erroneous SpO_2 readings.
  - Dyes or any substance containing dyes that change usual blood pigmentation may cause erroneous readings.
  - Elevated levels of total bilirubin may lead to inaccurate SpO2, SpMet, SpCO and SpHb readings.
- RRp performance has been clinically validated on 28 healthy, adult volunteers, 59 hospitalized adult patients, and 28 hospitalized pediatric patients (> 2 years of age). The clinical testing included non-randomized studies comparing RRp measurements against manual, clinician-scored capnograms. The clinical testing on hospitalized adult and pediatric patients was conducted using convenience sampling and did not necessarily include all patient conditions found in hospitals and hospital-type settings. The clinical testing results may not be generalized to all patient conditions. RRp performance was validated across the entire range of 4 to 70 RPM through bench testing. The RRp feature utilizes the same pleth waveform data from the same sensors used in SpO2 monitoring to detect the signals used for determining a respiration rate.

Invasive blood pressure measurement

- Monitoring with two or more transducers: If two or more blood pressure transducers are connected to the corpuls3 for monitoring, these must all be connected to the patient. If one of the transducers is not connected to the patient and lies open or hangs free, this may provide unintended current paths during defibrillation. Use transducers with specified insulation (5 kV DC).
- Carefully read and follow the operating instructions of the transducers you are using.
- If non-invasive blood pressure monitoring is also performed on the same limb during invasive blood pressure monitoring, the non-invasive monitoring will negatively affect the measurement results of the invasive measurement.
- Per connection socket at the patient box two transducer ports are merged. These are not insulated from each other (P1 and P2, P3 and P4).
- Invasive blood pressure measurement is not protected against high frequency surgical devices or microwave therapy devices.

Temperature measurement

- Carefully read and follow the operating instructions of the temperature sensor that you are using.

Printer paper

- Vertical grid; tolerance: ± 0.5 %
- Tolerance for grid spacing: ± 2 % per 1 mm
- Do not store in a plastic cover

Table A-47 Safety information

H ECG Analysis during Semi-automatic Defibrillation (AED mode)

Procedure

The ECG analysis is performed by a program which analyses the ECG in up to three blocks of 4 seconds with the following result:

- **`Shock recommended`**
- **`Shock not recommended`**

The analysis is performed in each of the three blocks and these individual assessments are subsequently weighted.

	Maximum duration of ECG analysis (12 s)			Result
Start	Block 1 (4 s)	Block 2 (4 s)	Block 3 (4 s)	Refractory time (8 s)

Table A-48 Duration of the maximum ECG analysis

If two of the three blocks yield the result "**`Shock recommended`**", the overall result is "**`Shock recommended`**". If two of the three blocks yield the result "**`Shock not recommended`**", the overall result is "**`Shock not recommended`**".

If the result "**`Shock recommended`**" is determined after 8 or 12 seconds, a refractory time of 8 seconds begins. The result is not revised during the refractory time, so the user can place the shock paddles on the patient and release a shock without having to worry that readiness to shock will be cancelled due to the disturbances caused by doing so. This refractory time can only be interrupted if another analysis is started by the user.

To avoid wasting time, some procedures in the process will be accelerated if the expected result is certain at an early stage:

	ECG analysis		Result
	`Shock recommended`	**`Shock recommended`**	**`Shock recommended`** (e. g. 200 Joule)
Start	Block 1 (4 s)	Block 2 (4 s)	Refractory time (8 s)
		`Charging`	Ready for shock

Table A-49 Acceleration of the ECG analysis process

If the first block yields the result "**`Shock recommended`**", the device will immediately begin to charge energy, to reduce the amount of time from beginning of analysis to readiness to shock.

If the overall outcome is already determined after two analysis blocks with a positive result, the third will be omitted and readiness to shock will begin as soon as the device has finished charging.

The following are defined as shockable rhythms:

- Ventricular fibrillation
- Ventricular tachycardia, rate > 180/min

ECG database for validation of the analysis software

Origin of the data

The ECG data used originate from recordings from the Creighton University Ventricular Tachyarrhythmia Database[1] [2] [3] as well as from the Massachusetts Institute of Technology – Beth Israel Hospital (MIT-BIH) Malignant Ventricular Arrhythmia Database [4] [5] [6]. These were recorded with common patient monitors similar to the corpuls3.

Application on validation of the analysis software

Scope of the measurements

A total of 1816 16-s long measurements from ECG sections which constitute a representative cross-section of all ECGs have been included for validation of the analysis software. These measurements were classified by a cardiologist with regard to ECG rhythms and shockability. The threshold between an asystole and a VF was set at an amplitude of 140 µV and the threshold between a shockable and a non-shockable VT at a heart rate of 180/min.

The measurements contained in this database were not used for development.

Performance goals for arrhythmia analysis algorithms (artifact free) as recommended by the American Heart Association[7].

Rhythms	**Test sample size total (required minimum)**	**Observed performance**	
		Defibrillator/pacer	Patient box
Shockable	758 (250)		
Coarse VF (Amplitude > 200 µV)	613 (200)	93.31 %	91.84 %
Rapid VT (rate > 180 /min)	145 (50)	100 %	100 %
Nonshockable	1058 (230)		
NSR	480 (100 arbitrary)	99.38 %	99.38 %
AF, SB, SVT, heart block, idioventricular, PVCs	392 (30 arbitrary)	98.21 %	98.72 %
Asystole	186 (100 for safety)	90.86 %	94.08 %

Table A-50 Classification table

Abbreviations:

VF, Ventricular fibrillation
VT, Ventricular tachycardia
NSR, Normal sinus rhythm
AF, Atrial fibrillation/-flutter
SB, Sinus bradycardia
SVT, Supraventricular tachycardia
PVCs, Premature ventricular contractions

[1] Goldberger AL, Amaral LAN, Glass L, Hausdorff JM, Ivanov PCh, Mark RG, Mietus JE, Moody GB, Peng C-K, Stanley HE. PhysioBank, PhysioToolkit, and PhysioNet: Components of a New Research Resource for Complex Physiologic Signals. *Circulation* **101**(23):e215-e220 [Circulation Electronic Pages; https://ahajournals.org/doi/10.1161/01.CIR.101.23.e215]; 2000 (June 13).

[2] Nolle FM, Badura FK, Catlett JM, Bowser RW, Sketch MH. CREI-GARD, a new concept in computerized arrhythmia monitoring systems. Computers in Cardiology 13:515-518 (1986)

[3] See https://physionet.org/content/cudb/1.0.0/]

[4] Goldberger AL, Amaral LAN, Glass L, Hausdorff JM, Ivanov PCh, Mark RG, Mietus JE, Moody GB, Peng C-K, Stanley HE. PhysioBank, PhysioToolkit, and PhysioNet: Components of a New Research Resource for Complex Physiologic Signals. *Circulation* **101**(23):e215-e220 [Circulation Electronic Pages; https://ahajournals.org/doi/10.1161/01.CIR.101.23.e215]; 2000 (June 13).

[5] Greenwald SD. Development and analysis of a ventricular fibrillation detector. M.S. thesis, MIT Dept. of Electrical Engineering and Computer Science, 1986.

[6] See also https://physionet.org/content/vfdb/1.0.0/

[7] Kerber, Richard E. (1997): Automatic external defibrillators for public access defibrillation. Recommendations for specifying and reporting arrhythmia analysis algorithm performance, incorporating new waveforms, and enhancing safety. A Statement for Health Professionals From the American Heart Association Task Force on Automatic External Defibrillation, Subcommittee on AED Safety and Efficacy. With assistance of Lance B. Becker, Joseph D. Bourland, Richard O. Cummins, Alfred P. Hallstrom, Mary B. Michos, Graham Nichol et al. Dallas, TX: American Heart Association (Scientific statement).

Assessment and Results

Decision-making reliability of the ECG analysis programme

Sensitivity and specificity

The quality of an ECG analysis programme is determined by the values **sensitivity** and **specificity**.

Performance indicators

For the evaluation of the performance of the algorithm the following performance indicators were defined. According to the recommendation of the AHA, test-ECGs of the "intermediate" class are not included in the calculation of sensitivity or specificity.

a = number of correct positive decisions

b = number of false positive decisions

c = number of false negative decisions

d = number of correct negative decisions

Result	Value (Defibrillator/pacer)	Value (Patient box)
a	717	708
b	27	19
c	41	50
d	1031	1039
Overall	1816	1816

Table A-51 Results

This therefore yields:

Defibrillator/pacer	Sensitivity = a/(a+c)= 94.6%
	Specificity = d/(b+d) = 97.4%
	False positive ratio = b/(b+d)= 2.6%
	Positive predictive value = a/(a+b)= 96.4%
Patient box	Sensitivity = a/(a+c)= 93.4%
	Specificity = d/(b+d) = 98.2%
	False positive ratio = b/(b+d)= 1.8%
	Positive predictive value = a/(a+b)= 97.4%

I Major Performance Characteristics

The essential performance of the corpuls3 and its optional accessories is:

- Defibrillation, synchronous cardioversion and AED therapy decision
- Pacer therapy
- ECG monitoring, diagnosis, heart rate and alarms
- SpO_2 monitoring, pulse rate and alarms
- CO_2 monitoring, respiration rate and alarms
- NIBP monitoring and alarms
- IBP monitoring and alarms
- Temperature monitoring and alarms
- Mounting in vehicle

J Guidelines and Manufacturer's Declaration

Electromagnetic emission		
The corpuls3 is intended for operation in the electromagnetic environment indicated below. The operator or the user has to make sure that the corpuls3 is used in such an environment.		
Emission measurements	**Compliance**	**Electromagnetic environment - guidelines**
HF emissions in accordance with CISPR 11	Group 1	The device uses HF energy only for its internal function. Consequently, its HF emission is very low and it is unlikely to interfere with neighbouring electronic devices.
HF emissions in accordance with CISPR 11	Class B	According to IEC 60601-1-2, the corpuls3 is intended for use in the EM environments "areas of home health care" and "professional healthcare institutions". These are among others: • EMS and patient transport vehicles. • Pre-hospital and intra-hospital emergency care environments (inside and outside of closed rooms).
Emission of harmonic oscillations in accordance with IEC 61000-3-2	Class A	
Voltage fluctuations/flicker in accordance with IEC 61000-3-3	Complied with	

Table A-52 Electromagnetic emission

Electromagnetic interference immunity			
	The corpuls3 is intended for operation in the electromagnetic environment indicated below. The operator or the user has to make sure that the corpuls3 is used in such an environment.		
Interference immunity tests	**IEC 60601 test level**	**Compliance level**	**Electromagnetic environment - guidelines**
According to IEC 60601-1-2, the corpuls3 is intended for use in the EM environments "areas of home health care" and "professional healthcare institutions". These are among others: • EMS and patient transport vehicles. • Pre-hospital and intra-hospital emergency care environments (inside and outside of closed rooms).			
Electrostatic discharge (ESD) in accordance with IEC 61000-4-2	± 8 kV Contact discharge ± 15 kV Air discharge	± 8 kV Contact discharge ± 15 kV Air discharge	Floors should be made of wood, concrete or metal or be covered with ceramic tiles. If the floor is covered with synthetic material, the relative humidity should be at least 30%.
Rapid transient electrical interference/bursts in accordance with IEC 61000-4-4	± 2 kV for mains connection ± 1 kV for SIPS/SOPS	± 2 kV for mains connection ± 1 kV for SIPS/SOPS	The quality of the power supply should correspond to that of a typical business or hospital environment.

Electromagnetic interference immunity			
Surges according to IEC 61000-4-5	± 1 kV normal mode voltage ± 2 kV common mode voltage	± 1 kV normal mode voltage ± 2 kV common mode voltage	The quality of the power supply should correspond to that of a typical business or hospital environment.
Voltage dips, brief interruptions and fluctuations in the power supply in accordance with IEC 61000-4-11	• 0 % U_T for ½ period • 0 % U_T for 1 period • 70 % U_T for 25 periods • 0 % for 250 periods	Not applicable	The device is always operated with a battery buffer. The user must ensure that the battery in the corpuls3 always remains adequately charged.
Magnetic field of the supply frequency (50/60 Hz) in accordance with IEC 61000-4-8	30 A/m	30 A/m	The corpuls3 must not be operated near a switched-on MRI unit (magnetic resonance imaging).
Note: U_T is the mains alternating voltage before application of the test level			

Table A-53 Electromagnetic interference immunity part 1

Electromagnetic interference immunity			
The corpuls3 is intended for operation in the electromagnetic environment indicated below. The operator or the user has to make sure that the corpuls3 is used in such an environment.			
Interference immunity tests	**IEC 60601 test level**	**Compliance level**	**Electromagnetic environment - guidelines**
Conducted HF interference according to IEC 61000-4-6	• 3 V_{eff} outside the ISM bands • 6 V_{eff} within the ISM bands	• 3 V_{eff} outside the ISM bands • 6 V_{eff} within the ISM bands	$d = 1.2\sqrt{P}$
	10 V_{eff} 150 kHz to 80 MHz outside the ISM bands[a]	3 V_{eff}	$d = 4.0\sqrt{P}$
Radiated HF interference according to IEC 61000-4-3	10 V/m 80 MHz to 2.7 GHz	3 V/m	ECG, oximetry monitor: $d = 4.0\sqrt{P}$ for 80 MHz to 800 MHz $d = 7.7\sqrt{P}$ for 800 MHz to 2.5 GHz With magnetic forces of > 3 V/m, disturbances in the ECG signal may selectively occur.

Electromagnetic interference immunity			
		10 V/m	Defibrillator/Pacer: no unintentional change in condition $d = 1.2\sqrt{P}$ for 80 MHz to 800 MHz $d = 2.3\sqrt{P}$ for 800 MHz to 2.5 GHz
		20 V/m	Defibrillator: no unintentional energy release $d = 0.6\sqrt{P}$ for 80 MHz to 800 MHz $d = 1.2\sqrt{P}$ for 800 MHz to 2.5 GHz *P* being the maximum nominal output of the transmitter in watts (W) according to the transmitter manufacturer's indications and *d* being the recommended protection distance in metres (m).[b] The magnetic force of stationary radio transmitters should be lower than the level of compliance[d] for all frequencies according to an on-site test[c] Interference is possible in the vicinity of devices that bear the following pictorial symbol:  Fig. A-4 Radio transmitter
	27 V/m	27 V/m	380 MHz - 390 MHz TETRA 400
	28 V/m	28 V/m	430 MHz – 470 MHz GMRS 460, FRS 460
	9 V/m	9 V/m	704 MHz - 787 MHz LTE Band 13, 17
	28 V/m	28 V/m	800 MHz - 960 MHz GSM 800/900, TETRA 800, iDEN 820, CDMA 850, LTE Band 5

Electromagnetic interference immunity			
	28 V/m	28 V/m	1700 MHz – 1990 MHz GSM 1800, CDMA 1900, GSM 1900, DECT, LTE Band 1/3/4/25, UMTS
	28 V/m	28 V/m	2400 MHz – 2570 MHz Bluetooth, WLAN 802.11 b/g/n, RFID 2450, LTE Band 7
	9 V/m	9 V/m	5100 MHz- 5800 MHz WLAN 802.11 a/n
Magnetic fields in close proximity pursuant to IEC 61000-4-39	8 A/m	8 A/m	30 kHz Modulation: CW
	65 A/m	65 A/m	134.2kHz Pulse modulation: 2.1 kHz
	7.5 A/m	7.5 A/m	13.56 MHz Pulse modulation: 50 kHz

Comment 1:
At 80 MHz and 800 MHz, the higher frequency range applies

Comment 2:
These guidelines may not be applicable in all cases. Propagation of electromagnetic variables is influenced by absorption and reflection via buildings, objects and people.

[a] The ISM frequency bands (for industrial, scientific and medical applications between 150 kHz and 80 MHz) are 6.765 MHz to 6.795 MHz; 13.553 MHz to 13.567 MHz; 26.957 MHz to 27.283 MHz and 40.66 MHz to 40.70 MHz

[b] The compliance levels in the ISM frequency bands between 150 kHz and 80 MHz and in the frequency range of 80 MHz and 2.5 GHz are intended to reduce the likelihood that portable/mobile communication devices will be able to cause interference if they are unintentionally brought into the patient area. For this reason, the additional factor 10/3 is applied in calculating the recommended protection distances in these frequency ranges.

[c] The magnetic force of stationary transmitters, such as base stations of mobile telephones and mobile terrestrial radio devices, amateur radio stations, AM and FM radio and television transmitter can theoretically not be determined in advance. To establish the electromagnetic environment with regard to stationary transmitters, a study of the location should be considered. If the measured magnetic force at the location at which the corpuls3 is used exceeds the above mentioned compliance level, the corpuls3 must be observed to verify function as intended. If unusual performance characteristics are observed, additional measures may be required, such as a modified orientation or another location for the corpuls3.

d Above the frequency range of 150 kHz to 80 MHz the field strength must be less than 3 V/m.

Table A-54 Electromagnetic interference immunity part 2

Recommended protection distances between portable/mobile HF communication devices and the corpuls3				
The corpuls3 is intended for operation in an electromagnetic environment in which radiated HF interference is controlled. The operator or the user of the corpuls3 can help to prevent electromagnetic interference by keeping minimum distances between portable/mobile HF communication devices (transmitters) and the corpuls3, as recommended below according to the maximum output of the communication device.				
Nominal output of the transmitter in W	**Protection distance according to transmission frequency** in m			
	150 kHz to 80 MHz outside the ISM bands	**150 kHz to 80 MHz in the ISM bands**	**When used as a monitor**	
			80 MHz to 800 MHz	**800 MHz to 2.7 GHz**

Recommended protection distances between portable/mobile HF communication devices and the corpuls3				
	$d = 1.2\sqrt{P}$	$d = 4.0\sqrt{P}$	$d = 4.0\sqrt{P}$	$d = 7.7\sqrt{P}$
0.01	0.12	0.40	0.40	0.77
0.1	0.38	1.3	1.3	2.4
1	1.2	4.0	4.0	7.7
10	3.8	13	13	24
100	12	40	40	77
	When used as a defibrillator/pacer		**Defibrillator: no unintentional energy release**	
	80 MHz to 800 MHz $d = 1.2\sqrt{P}$	**800 MHz to 2.7 GHz** $d = 2.7\sqrt{P}$	**80 MHz to 800 MHz** $d = 0.6\sqrt{P}$	**800 MHz to 2.7 GHz** $d = 1.2\sqrt{P}$
0.01	0.12	0.27	0.06	0.12
0.1	0.38	0.66	0.15	0.38
1	1.2	2.7	0.6	1.2
10	3.8	6.6	1.5	3.8
100	12	27	6.0	12

For transmitters, whose nominal output is not indicated in the table above, the distance can be determined using the equation which corresponds to the respective column, with P being the nominal output of the transmitter in watts (W) according to the transmitter manufacturer's indication.

Comment 1
The ISM bands between 150 kHz and 80 MHz are 6.765 MHz to 6.795 MHz; 13.553 MHz to 13.567 MHz; 26.957 MHz to 27.283 MHz and 40.66 MHz to 40.70 MHz.

Comment 2
To calculate the recommended protection distance of transmitters in the ISM frequency bands between 150 kHz and 80MHz and in the frequency range between 80 MHz and 2.7 GHz, an additional factor of 10/3 is used to reduce the likelihood that a portable/mobile communications device brought into the patient area will result in interference.

Comment 3
These guidelines may not apply in all situations. Propagation of electromagnetic waves is influenced by absorption and reflection via buildings, objects and people.

Subject to technical modifications.

Table A-55 Recommended protection distances



Warning

Risk of delayed therapy

Portable HF communication devices should not be used at a closer distance than 30 cm (12 inches) from the corpuls3. Non-compliance can lead to a reduction of the essential performance of the corpuls3.

Note When operated in an aircraft, the monitoring function of the corpuls3 can be impaired by the radio technology of the aircraft. The manufacturer recommends a complete function test in the aircraft before installing the corpuls3. If interferences should be observed in measurement curves or measurement parameters, it is recommended to re-position the corpuls3 with a greater distance to the radio equipment.

K Warranty

In addition to the statutory warranty conditions in Germany, the manufacturer offers a limited manufacturer's warranty on material defects and manufacturing faults. The scope of the warranty can be viewed in the respective guarantee conditions of the relevant sales and service partners.

This warranty concludingly regulates the legal relationship between the purchaser and GS Elektromedizinische Geräte G. Stemple GmbH. Further damage claims are excluded, unless liability is prescribed by law.

Excepted from the warranty are wear parts, errors and damages that are the result of improper handling, faulty storage or installation and extraneous causes, such as transport damage, damage caused by impact, reparations and changes carried out by a non-authorised third party. The claim under the warranty shall be void as well if accessories are used that were not purchased from GS Elektromedizinische Geräte G. Stemple GmbH or an authorised sales partner. Software support (except updates) is not covered under the warranty.

In case of a defect and further warranty and guarantee handling please contact your authorised sales and service partner or the manufacturer.

The manufacturer shall only accept liability for user and operating safety of the device if maintenance, safety checks, repairs, additions and new settings were performed by the manufacturers themselves or persons specifically authorised by the manufacturer.

Additionally, the general terms and conditions of the company GS Elektromedizinische Geräte G. Stemple GmbH shall apply in the current version until further amendment. The general terms and conditions are available at GS Elektromedizinische Geräte G. Stemple GmbH upon request.

L Protection Rights and Patents

The corpuls3 and some of its accessories are protected by patents either applied for and/or already granted. Consequently, possession or purchase of this device does not automatically confer licence to use this device with spare parts or accessories (cables, sensors, etc.) which, alone or in combination with this device, infringe applicable patents for this device or patents of individual components which are used with this device.

It is therefore not permitted to, e. g:

- dismantle parts of the corpuls3 and use them for other purposes.
- Replicate components or accessories.

The corpuls3 and its accessories may not be modified without permission of the manufacturer.

Goods are mentioned in this user manual without mention of any existing patents, samples or trademarks.

corpuls® is a registered trademark of GS Elektromedizinische Geräte G. Stemple GmbH.

® is a registered trademark of GS Elektromedizinische Geräte G. Stemple GmbH.

M Disposal of the Device and Accessories





To further preservation and protection of the environment, avoidance of pollution and recycling of raw materials, the European Commission issued a directive decreeing that electrical and electronic devices have to be taken back and correctly disposed of or recycled by the manufacturer. Devices marked with this symbol therefore may not be disposed of in the normal waste within the European Union. The same is true for disposable consumables, such as e. g. electrodes.

Please ask your local authorities, your sales and service partner or the manufacture for information on:

- the proper return of devices to the manufacturer for disposal within EU legislation,
- the proper disposal of devices outside EU legislation.



Information on the disposal of packaging

The packaging of our devices is an integral part of our product. The packaging has been especially developed for our product and therefore in general is optimally suited for shipping. In case you have to ship your device within or after the guarantee period to our service team, the original packaging is the best protection from transport damage.

Manufacturer's recommendation

Keep the original packaging for as long as you have the device in your possession!

If, however, you want to dispose of the packaging or if it is an external packaging used by us, you may dispose of it by means of your regional institutions (recovered paper container, recycling centre, paper collection etc).

N Note on Data Protection

During the operation of the corpuls3, personalised data for service provision and patient care is being saved or transferred in encrypted form under strict adherence to the directives 95/46/EC (Data protection), 2002/58/EC (Data protection for electronic communication) as well as other relevant directives, ordinances and legislation.

0 Residual Risks

GS Elektromedizinische Geräte G. Stemple GmbH recommends reading the user manual before using the device and following the indications, warnings and cautions. Otherwise the following hazardous situations may arise:

No.	Hazardous situation:
1	Delayed defibrillation/cardioversion < 3 min
2	No/delayed defibrillation/cardioversion > 3 min
3	CPR - Hands-off time < 30 s
4	Defibrillation at wrong time / Defibrillation of non-shockable rhythm
5	Insufficient CPR-quality
6	Insufficient ventilation - Hypo-/Hyperventilation
7	Insufficient defibrillation/cardioversion
8	Major blunt mechanical force - User
9	Insufficient therapy - Patient with hypo-/hyperthermia
10	Insufficient therapy - Patient with internal bleeding
11	Insufficient therapy - Patient with intoxication
12	Delayed CPR < 3 min
13	Inadequate therapy - Patient with hypotension
14	Inadequate therapy - Patient with hypertension
15	Inadequate therapy - Patient with respiratory insufficiency
16	Inadequate therapy - Patient with bradycardia
17	Inadequate therapy - Patient with tachycardia
18	Inadequate therapy - Patient with myocardial infarction
19	Inadequate therapy - Patient with arrhythmias
20	Delayed pacer therapy < 3 min
21	No/delayed pacer therapy > 3 min
22	Inadequate therapy - Changing ICP
23	Insufficient ventilation - Wrong ventilator parameters (e.g. volume, pressure)
24	Delayed tele consil
25	Unsynchronised cardioversion attempt
26	Worsening of critical patient undetected
27	Delayed patient monitoring < 3 min
28	No/delayed patient monitoring > 3 min
29	Parts of the body exposed to high temperatures
30	Exposure to irritating substances
31	Exposure to high voltage
32	Exposure to loud noise

33	Exposure to low voltage
34	Exposure to pathogens
35	Minor blunt mechanical force - extremities
36	Non-indicated pacer therapy
37	Gas/air embolism
38	Exposure of stealth missions
39	Blinding of users with night vision devices (e.g. helicopter pilots)
40	Adverse therapeutic effect - Defibrillation
41	Defibrillator energy too high
42	Adverse therapeutic effect - Cardioversion
43	Adverse therapeutic effect - Pacer therapy
44	Insufficient pacer therapy
45	Major blunt mechanical force - Patient
46	Publicly available device data
47	Publicly available personal data
48	Publicly available medical data
49	Delayed defibrillation by indication < 1 min
50	Inadequate therapy - Patient with atrial fibrillation (AF)
51	Skin burn
52	Unconscious patient
53	Inadequate therapy - Patient requiring cardioversion
54	Inadequate therapy - Patient with unstable arrhythmias
55	Major blunt mechanical force - Resuscitation patient

Table A-56 Residual risks

P User Manual primeCPR feedback sensor (P/N 04235.4)

CE	SCHILLER AG Altgasse 68 CH-6341 Baar, Switzerland	Phone:+41 (0) 41 766 42 42 Fax:+41 (0) 41 761 08 80 E-mail:sales@schiller.ch Web:www.schiller.ch
EC REP	Schiller Medizintechnik GmbH Otto-Lilienthal-Ring 4 85622 Feldkirchen Germany	Device availability in your market is subject to regulatory approval
EN: European Authorised Representative, DE: Europäischer Bevollmächtigter, CZ: Evropský zmocněný zástupce, ES: Representante Europea Autorizada, FR: Représentant autorisé européen, HU: Meghatalmazott európai képviselő,HR: Europski ovlašteni predstavnik, IT: Rappresentante autorizzato per l'Europa, LT: Europos įgaliotasis atstovas, LV: Eiropas pilnvarotais pārstāvis, NL: Gemachtigde Europese vertegenwoordiger, NO: Europeisk autorisert representant, PL: Autoryzowany przedstawiciel w Europie, PT: Representante Autorizado Europeu, RO: Reprezentant autorizat European, SR: Evropski ovlašćeni predstavnik, SV: Europeiska auktoriserade representanten, SK: Európsky splnomocnený zástupca, SL: Evropski pooblaščeni zastopnik, FI: Euroopan valtuutettu edustaja, zastopnik, BG: Evropeĭski otoriziran predstavitel, EL: Ευρωπαίος Εξουσιοδοτημένος Αντιπρόσωπος		

primeCPR Feedback Sensor

The primeCPR feedback sensor is used as a guide in practice of cardiopulmonary resuscitation (CPR) in patients with suspected cardiac arrest, and where CPR can be performed with the heel of the hand.
When attached to the chest of the patient, the sensor provides real-time feedback on the performed CPR compressions with measurements of depth, rate for each single compression, thereby simplifying monitoring of their quality.

Important Notes

Note For detailed information on the application and displayed values, please refer to the user manual of the device.

Before Use

- Check if the primeCPR feedback sensor can be used in connection with the intended device and if it works correctly.
- Make sure that the sensor and cable are clean and undamaged.

Application

Note
- We recommend using a primeCPR PAD so that the primeCPR feedback sensor remains in position and does not lift off when relieved, which can lead to inaccurate measured values.
- The red side of the primeCPR feedback sensor must be attached to the primeCPR PAD.

Applying the primeCPR Feedback Sensor

1. Connect the cable of the primeCPR feedback sensor to the CPR interface of the device.
2. Place the primeCPR PAD on the lower third of the breastbone (= middle of the thorax) and remove the white foil.
3. Place the primeCPR feedback sensor with the red side on the primeCPR PAD.

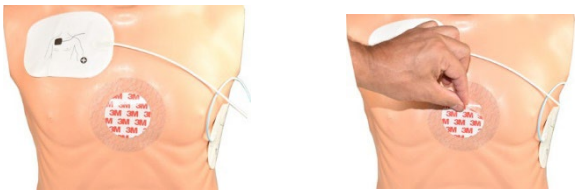

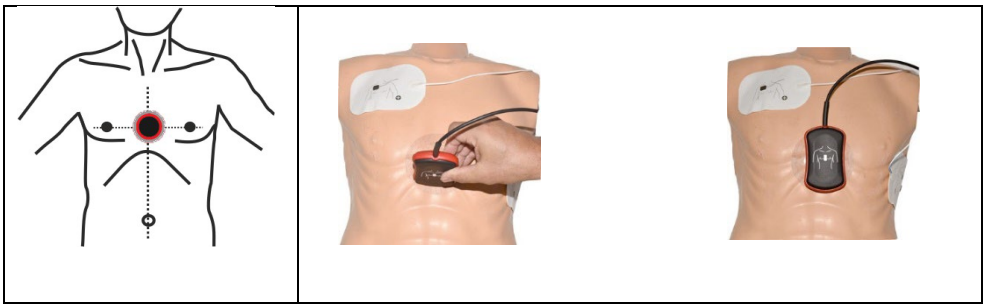

1. Place your hand on the primeCPR feedback sensor so that the heel of your hand (1) is in the middle of the primeCPR feedback sensor.

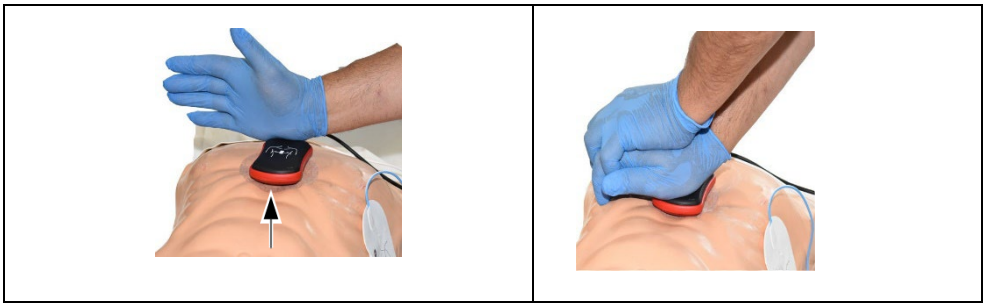

2. Start with CPR and monitor the compression quality on the device and follow the instructions given by the device.

Notes on Cleaning/Disinfection

Warning

Risk of electrical shock

Using the wrong cleaning or disinfection solution can damage the primeCPR feedback sensor.

Note Never immerse the patient cable in liquid.

Synthetic materials

- Casing: thermoplastic polyurethane (TPU)
- Cable: polyurethane (PU)

With time, the casing may become less resistant if:

- an alcaline cleaner or a cleaner with a high alcohol concentration is left for a long time on the surface, or
- if a warm detergent/disinfectant is used.

For this reason, the manufacturer recommends using only cleaning agents with alcohol content that are adequate for sensitive materials such as TPU or PU, at room temperature (approx. 20 °C).

Approved Detergents

Isopropyl alcohol (50 %); neutral, mild detergent (wipe and rub dry)

Recommended Disinfectants:

- Bacillol® 30 Sensitive foam/ Bacillol® 30 Sensitive Tissues
- Mikrozid® AF
- Meliseptol® Foam pure
- RTU Wex-Cide®
- Windex®
- 10% bleach/water solution

Note Please note the RKI (Robert Koch Institute) recommendations as well as the manufacturer product information in regard to the areas of application, the level of concentration and the exposure time of the disinfectant.

Technical specifications

primeCPR feedback sensor (P/N 04235.4)



Optional 5 pcs. primeCPR PAD (P/N 04235.41)
Adhesive pad only single use

primeCPR feedback sensors (incl. cable) and primeCPR PADs are not made of natural latex.

Sensor
Sensor name: primeCPR feedback sensor
Dimensions: 105 x 65 x 25mm (l/w/d)
Weight: approx. 152 g
Cable length: 2 m
Environmental temperature
Temperature/Humidity/Pressure: • Operation: -5 to 50 °C; 540 to 1200 hPa at 15 to 95 % humidity, without condensation • Transport/Storage: -10 to 50 °C / 5 to 50 °C; • Transport & Storage: 500 to 1060 hPa; 10 to 95 % humidity, without condensation
Protection against water and dust: IP66
Readings
Rate: 1 to 160 compressions/min
Compression depth: 1 to 127 mm
Sensor Accuracy
Rate: ± 3 compressions/min
Compression depth: ± 5 % at 50 mm (Lab conditions)
Electrical Data
Power supply: 5 VDC from the medical device
Life cycle

500,000 compressions	
	Symbol for the recognition of electrical and electronic equipment. The device must be disposed of in a municipally approved collection point or recycling centre when it is no longer required.
	Read the user manuals/instructions for use
	Type BF classification
	Symbol for identifying the manufacturer and the date of manufacture
IP66 Sensor is protected against water jets and dust.	

Q corpuls3 HYPERBARIC (HBO)

Operation in hyperbaric chamber up to 3 barg and 23% max. oxygen concentration

The product variant corpuls3 **HYPERBARIC** is approved for operation in a multiplace hyperbaric chamber during hyperbaric oxygen therapy (HBO) up to an overpressure of 3 barg and a maximum oxygen concentration of 23%.

For further information that go beyond this appendix, please contact the manufacturer or their authorised sales and service partners.

Note When the door of the hyperbaric chamber is closed, the reach of the radio connection towards modules outside the chamber is reduced.

Note This chapter applies exclusively to HBO devices placed on the market in accordance with the EU MDD.



Caution

There can be changes in the measured values of non-invasive blood pressure measurement (option) during the build-up and decrease of pressure inside the pressure chamber.
Do not perform NIBP measurements during the diving phases.



Caution

There can be changes in the measured values of CO_2 monitoring (option), because the CO_2 partial pressures are changing under pressure.



Warning

The corpuls3 is **not** intended for operation in a monoplace hyperbaric chamber or in a multiplace hyperbaric chamber with **more** than 3 barg and/or **more** than 23 % oxygen concentration.



Warning

Charging the monitoring unit and the patient box inside the pressure chamber is only allowed via the charging bracket for monitoring unit, P/N 04401.041. The use of MagCode connectors and charging brackets with integrated MagCode is forbidden for charging the monitoring unit, the patient box and the defibrillator/pacer.

The red cover over the magnetic contact fields may not be removed.



Warning

When administering oxygen via inhalation mask or nasal cannula or when using a ventilation bag with reservoir, make sure that no oxygen accumulates above the corPatch electrodes. When defibrillation is imminent, the oxygen supply has to be shut off.



Warning

The use of swivelling adapters (swivelling adapter 35 °, P/N 04406.01 and swivelling adapter 60 °, P/N 04406) is forbidden inside the pressure chamber.



Warning

The protection of the power supply for the charging bracket for the monitoring unit, P/N 04401.041 has to be minimum 6 A and maximum 10 A.



Warning

To guarantee safe operation of the device in a hyperbaric chamber, exclusively use the materials itemised in the list of accessories approved for operation in hyperbaric chamber (see chapter 10.8 Approved Accessories, Spare Parts and Consumables, page 242). Modules, batteries and accessories without HBO certificate may not be used in combination with HBO certified modules, batteries and accessories.

R RED declaration of conformity

Hereby, GS Elektromedizinische Geräte G. Stemple GmbH declares that the corpuls3 is in compliance with Directive 2014/53/EU.

The full text of the EU declaration of conformity is available at the following internet address:

https://my.corpuls.world/download/category/corpuls3-qm-ra

S List of Illustrations

Fig. 1-1 Example of Software-UDI corpuls3 ... 2
Fig. 3-1 Compact device ... 9
Fig. 3-2 Individual modules ... 10
Fig. 3-3 Usage options of the modular corpuls3 ... 11
Fig. 3-4 Usage options of the modular corpuls3 as a patient monitoring system ... 12
Fig. 3-5 Monitoring unit ... 14
Fig. 3-6 Monitoring unit, rear view ... 15
Fig. 3-7 Patient box (illustration may differ) ... 15
Fig. 3-8 Patient Box Interfaces, right hand side ... 16
Fig. 3-9 Patient Box Interfaces, left hand side ... 17
Fig. 3-10 Patient Box with Accessory Bag ... 17
Fig. 3-11 Defibrillator/Pacer ... 18
Fig. 3-12 Defibrillator/Pacer SLIM ... 19
Fig. 3-13 Brackets ... 19
Fig. 3-14 Biphasic defibrillation pulse 6/4 (qualitative representation) ... 21
Fig. 3-15 Biphasic defibrillation pulse 4/3 (qualitative representation) ... 22
Fig. 3-16 Alarm messages in the alarm history ... 30
Fig. 3-17 Inverted parameter field ... 30
Fig. 3-18 Jog dial ... 31
Fig. 3-19 Alarm message on the patient box screen ... 32
Fig. 3-20 Remaining running time of the corpuls3 in the current operating status ... 33
Fig. 3-21 Remaining running time of the patient box ... 34
Fig. 3-22 Display of the current state of charge of the batteries on mains operation ... 35
Fig. 3-23 Compact device, power supply (illustration may differ) ... 35
Fig. 3-24 Monitoring unit, power supply ... 36
Fig. 3-25 Patient box, power supply (illustration may differ) ... 36
Fig. 4-1 Monitoring unit, operating elements and LEDs ... 37
Fig. 4-2 Monitoring unit, example of basic structure of the screen pages ... 40
Fig. 4-3 Screen page, example with horizontal and vertical parameter area ... 42
Fig. 4-4 Inverted video display of the screen (colours may differ) ... 43
Fig. 4-5 Touchscreen, active areas are highlighted in colour ... 44
Fig. 4-6 Patient box, displays on the screen (illustration may differ) ... 45
Fig. 4-7 Patient box, control keys and LEDs (illustration may differ) ... 46
Fig. 4-8 Defibrillator, control key and status LEDs ... 47
Fig. 4-9 Defibrillator SLIM, control key and status LEDs ... 47
Fig. 4-10 Confirmation prompt before switching off ... 49
Fig. 4-11 Upload screen ... 49
Fig. 4-12 Switching off with pacer active ... 50
Fig. 4-13 Warning on switching off ... 50
Fig. 4-14 Example for softkey context menu ... 51
Fig. 4-15 Parameter context menu (illustration may differ) ... 52
Fig. 4-16 Curve context menu ... 52
Fig. 4-17 Main menu ... 53
Fig. 4-18 Configuration dialogue ... 54

Fig. 4-19 Disconnecting the monitoring unit from the defibrillator/pacer (illustration may differ) ... 55
Fig. 4-20 Disconnecting the monitoring unit from the defibrillator/pacer SLIM (illustration may differ) ... 55
Fig. 4-21 Disconnecting the patient box from the monitoring unit (illustration may differ) ... 56
Fig. 4-22 Connecting the patient box to the monitoring unit (illustration may differ) ... 56
Fig. 4-23 Connecting the monitoring unit to the defibrillator/pacer (illustration may differ) ... 57
Fig. 4-24 Connecting the monitoring unit to the defibrillator/pacer SLIM (illustration may differ) ... 57
Fig. 4-25 Removing the patient box from the compact device (illustration may differ) ... 58
Fig. 4-26 Removing the patient box from the compact device with defibrillator/pacer SLIM (illustration may differ) ... 58
Fig. 4-27 Accessory bag and patient box, front view (illustration may differ) ... 59
Fig. 4-28 Accessory bag with patient box, rear view (illustration may differ) ... 59
Fig. 4-29 Inserting the plugs on the right-hand side of the patient box ... 60
Fig. 4-30 Contents of right-hand bag (illustration may differ) ... 61
Fig. 4-31 Connecting the plugs on the left-hand side of the patient box (illustration may differ) ... 61
Fig. 4-32 Contents of left-hand bag (illustration may differ) ... 62
Fig. 4-33 Inserting the compact device into the bracket (Illustration may differ) ... 63
Fig. 4-34 Inserting the monitoring unit into the bracket (Illustration may differ) ... 64
Fig. 4-35 Inserting the patient box into the charging bracket (ceiling installation (illustration may differ)) ... 65
Fig. 5-1 Connecting the therapy electrode cables (illustration may differ) ... 68
Fig. 5-2 Removing the shock paddles from their holders ... 69
Fig. 5-3 AED mode, initial screen (illustration may differ) ... 71
Fig. 5-4 AED mode function keys ... 72
Fig. 5-6 Symbol for connected corpuls cpr in pie chart ... 73
Fig. 5-7 Applying the shock paddles ... 76
Fig. 5-8 Manual defibrillation, initial screen (illustration may differ) ... 78
Fig. 5-9 Function keys for manual defibrillation and cardioversion ... 79
Fig. 5-10 Applying the shock paddles ... 82
Fig. 5-11 Connecting baby shock electrodes ... 85
Fig. 5-12 Pacer function ... 86
Fig. 5-13 Pacer pulse identification ... 87
Fig. 5-14 Pacer, Recommended electrode placement ... 89
Fig. 5-15 Pacer, initial screen ... 90
Fig. 5-16 Pacer, selecting the intensity ... 91
Fig. 5-17 Pacer, OVERDRIVE function ... 92
Fig. 5-18 Softkey context menu metronome ... 95
Fig. 5-19 Connecting the corPatch CPR sensor to the corPatch CPR intermediate cable ... 97
Fig. 5-20 CPR feedback, attaching the corPatch CPR sensor ... 98
Fig. 5-21 CPR Feedback corPatch CPR sensor ... 99
Fig. 5-22 Pictogram for applying the primeCPR sensor ... 101
Fig. 5-23 CPR feedback ... 102
Fig. 5-24 Parameter field CPR rate ... 102
Fig. 5-25 Display of corpuls cpr parameters ... 104
Fig. 6-1 Selection of the monitoring and diagnostic function ... 107

Fig. 6-2 Trend curves ... 108
Fig. 6-3 ECG monitoring, applying the ECG electrodes (shortened form) ... 110
Fig. 6-4 ECG monitoring, initial screen ... 111
Fig. 6-5 Real-time printout, section ... 112
Fig. 6-6 ECG monitoring, adapting the curves ... 113
Fig. 6-7 Heart rate parameter field ... 114
Fig. 6-8 Diagnostic ECG, applying the ECG electrodes (1) ... 117
Fig. 6-9 Diagnostic ECG, applying the ECG electrodes (2) ... 118
Fig. 6-10 Diagnostic ECG, preview screen ... 119
Fig. 6-11 D-ECG, options ... 119
Fig. 6-12 Printout of 12-lead ECG (illustration may differ) ... 121
Fig. 6-13 D-ECG printout of the representative cycle with **Glasgow Full Scale** (optional) (illustration may differ) ... 122
Fig. 6-14 D-ECG printout with ECG analysis and ECG interpretation **Glasgow Full Scale** (option) (illustration may differ) ... 123
Fig. 6-15 D-ECG printout with ECG analysis and ECG interpretation **HES® Pro** (option) (illustration may differ) ... 124
Fig. 6-16 Rhythm- and typing diagram for a regular sinus rhythm ... 126
Fig. 6-17 Rhythm- and typing diagram for a sinus rhythm with two compensated ventricular and one compensated supraventricular extrasystole (illustration may differ) ... 126
Fig. 6-18 Longterm ECG with monitoring function ... 129
Fig. 6-19 Connecting the oximetry sensor on to the intermediate cable (Illustration may differ) ... 132
Fig. 6-20 Oximetry monitoring, attaching the oximetry sensor ... 132
Fig. 6-21 Oximetry monitoring, configured screen (illustration may differ) ... 133
Fig. 6-22 Pleth monitoring, section of a printout ... 134
Fig. 6-23 Pulse rate parameter field ... 135
Fig. 6-24 Parameter field Respiration rate over pleth ... 135
Fig. 6-25 CO_2 monitoring, nasal adapter ... 137
Fig. 6-26 CO_2 monitoring, disposable endotracheal tube adapter ... 138
Fig. 6-27 Fitting the disposable CO_2 nasal(/oral) adapter on the patient ... 138
Fig. 6-28 CO_2 monitoring, configured screen ... 140
Fig. 6-29 CO_2 monitoring, section of a printout ... 140
Fig. 6-30 Respiration rate parameter field ... 141
Fig. 6-31 NIBP user interface in large view ... 144
Fig. 6-32 NIBP user interface in trend view ... 144
Fig. 6-33 NIBP monitoring, attaching the NIBP cuff ... 146
Fig. 6-34 NIBP monitoring parameter fields ... 147
Fig. 6-35 NIBP parameter field with active interval measurement ... 148
Fig. 6-36 IBP calibration ... 150
Fig. 6-37 IBP monitoring, configured screen ... 151
Fig. 6-38 IBP monitoring, section of a printout ... 151
Fig. 6-39 Temperature monitoring parameter field ... 153
Fig. 7-1 System settings, user level DEFAULT ... 155
Fig. 7-2 Settings Date/Time ... 155
Fig. 7-3 Displaying curves ... 157
Fig. 7-4 Displaying parameter fields ... 157

Fig. 7-5 Big parameter fields ... 158
Fig. 7-6 Selecting pre-set views ... 159
Fig. 7-7 Printer setting "Same as screen" ... 160
Fig. 7-8 Selecting printer curves ... 161
Fig. 7-9 Printer settings Trend and Protocol ... 162
Fig. 7-10 Printer settings for D-ECG (illustration may differ) ... 163
Fig. 7-11 ECG settings ... 166
Fig. 7-12 Settings for oximetry monitoring ... 167
Fig. 7-13 Settings for CO_2 monitoring ... 169
Fig. 7-14 Settings for IBP monitoring ... 170
Fig. 7-15 Settings for CPR feedback ... 171
Fig. 7-16 Alarm settings ... 172
Fig. 7-17 Alarm limits ... 173
Fig. 7-18 Setting automatic alarm limits ... 174
Fig. 7-19 Code prompt ... 175
Fig. 7-20 System settings (persons responsible for the device) ... 176
Fig. 7-21 Event configuration (persons responsible for the device) ... 178
Fig. 7-22 Settings of the defibrillation function (persons responsible for the device) ... 180
Fig. 7-23 Filter settings for ECG (persons responsible for the device) ... 181
Fig. 7-24 Alarm settings (persons responsible for the device) ... 183
Fig. 7-25 Pre-setting views (illustration may differ) ... 184
Fig. 7-26 Entering a name for a view ... 185
Fig. 7-27 Entering master data (persons responsible for the device) ... 186
Fig. 7-28 ECG settings (persons responsible for the device, illustration may differ) ... 187
Fig. 7-29 ECG measurement and ECG interpretation version in system info ... 188
Fig. 7-30 Settings for the insurance card reader (persons responsible for the device) ... 190
Fig. 7-31 Extended settings for CPR feedback ... 191
Fig. 7-32 NIBP settings ... 193
Fig. 7-33 Settings feed speed (persons responsible for the device) ... 194
Fig. 8-1 Entering patient data, part 1 ... 195
Fig. 8-2 Entering patient data, part 2 ... 195
Fig. 8-3 Selecting pre-configured events ... 196
Fig. 8-4 Example of an ECG in the protocol at the time of an event ... 199
Fig. 8-5 Mission browser ... 200
Fig. 8-6 D-ECG Browser ... 201
Fig. 8-7 Readout of patient data from insurance card reader ... 203
Fig. 9-1 Telemetry settings (Persons responsible for the device) ... 205
Fig. 9-2 Telemetry connections (Persons responsible for the device) ... 208
Fig. 9-3 Configuration of Telemetry Services ... 209
Fig. 9-4 Add network ... 213
Fig. 9-5 Configuring a network ... 213
Fig. 9-6 Phonebook (= telemetry connections) ... 216
Fig. 9-7 Confirmation prompt for mission upload ... 217
Fig. 9-8 Bluetooth settings (Persons Responsible for the Device) ... 219
Fig. 9-9 Bluetooth connections (persons responsible for the device) ... 220
Fig. 9-10 Bluetooth connections ... 221

Fig. 9-11 Incoming webMessage 223
Fig. 9-12 Printing a webMessage 224
Fig. 10-1 Opening the printer flap 235
Fig. 10-2 Printer 235
Fig. 10-3 Changing the battery (monitoring unit) 236
Fig. 10-4 Monitoring unit, infrared interfaces 239
Fig. 10-5 Patient box, infrared interface 239
Fig. 10-6 Defibrillator/Pacer, infrared interface 239
Fig. A-1 Biphasic defibrillator impulse 6/4 319
Fig. A-2 Biphasic defibrillator impulse 4/3 320
Fig. A-3 Pacer impulse 320
Fig. A-4 Radio transmitter 336

T List of Tables

Table 0-1 Versions of the User manual iv
Table 0-2 Supplements to the User manual v
Table 0-3 Compatibility v
Table 1-1 Information Labels, Warning Labels and Symbols on the Device 2
Table 2-1 Indications and Contraindications 6
Table 2-2 Body areas of application 6
Table 3-1 Brackets and power supply options 20
Table 3-2 Frequency and intensity 23
Table 3-3 Clinical benefit 25
Table 4-1 Keyboard layout defibrillation keys (modifications possible) 38
Table 4-2 Module connection status 41
Table 4-3 Module connection status 45
Table 4-4 Contents of right-hand bag 60
Table 4-5 Contents of left-hand bag 62
Table 5-1 Therapy electrodes for defibrillation and pacing 66
Table 5-2 Metronome modes 94
Table 6-2 Coded Explanations by **HES® Pro** 125
Table 6-3 Criteria of the representative cycle 125
Table 6-4 IBP monitoring, pressure channel assignment 149
Table 7-1 Values for system settings 155
Table 7-2 Settings Date/Time 156
Table 7-3 Values for printer settings 161
Table 7-4 Values for trend settings 162
Table 7-5 Printer settings for D-ECG 164
Table 7-6 Adjusting the printer intensity 165
Table 7-7 Values for ECG setting 166
Table 7-8 Values for oximetry Monitoring 168
Table 7-9 CO_2 monitoring values 169
Table 7-10 Values for IBP monitoring 170
Table 7-11 Values for CPR feedback 171
Table 7-12 Settings for the VT/VF alarm 172
Table 7-13 Values for alarm limits 174
Table 7-14 Values for system settings (persons responsible for the device) 177
Table 7-15 Values for defibrillation function configuration 181
Table 7-16 Filter setting for monitoring ECG, diagnostic ECG (persons responsible for the device) 182
Table 7-17 Alarm settings (persons responsible for the device) 183
Table 7-18 Master data (persons responsible for the device) 185
Table 7-19 Values for configuration, ECG measurement and ECG interpretation 187
Table 7-20 Values for metronome settings 192
Table 7-21 Values for NIBP monitoring 193
Table 7-22 Settings feed speed of event ECG (persons responsible for the device) 194
Table 8-1 Log overview 198
Table 9-1 Configuration values, telemetry 205

Table 9-2 Configuration of Telemetry Services ... 210
Table 9-3 Values for Bluetooth® configuration ... 220
Table 10-1 Maintenance intervals ... 225
Table 10-2 Daily check of the device ... 229
Table 10-3 Daily visual check of the corpuls3 and the accessories ... 231
Table 10-4 Monthly functional test ... 233
Table 10-5 Overview of recommended disinfectants, active ingredients with concentration ... 238
Table 11-1 Alarm messages, alphabetical ... 256
Table 11-2 General malfunctions ... 258
Table 11-3 Network malfunctions ... 258
Table 11-4 Malfunctions during defibrillation ... 259
Table 11-5 Malfunctions during stimulation (pacer) ... 259
Table 11-6 Malfunctions during ECG monitoring ... 260
Table 11-7 Malfunctions during oximetry monitoring ... 262
Table 11-8 Malfunctions during NIBP monitoring ... 262
Table 11-9 Malfunctions during CO_2 monitoring ... 266
Table 11-10 Malfunctions during temperature monitoring ... 266
Table 11-11 Malfunctions during IBP monitoring ... 266
Table 11-12 Printer malfunctions ... 268
Table 11-13 Malfunctions in energy management ... 268
Table 11-14 Malfunctions during synchronised therapy with the corpuls cpr ... 268
Table 11-15 Notifications in the message line and information in the protocol ... 281
Table A-1 Symbols ... 288
Table A-2 List of Abbreviations ... 289
Table A-3 Function checklist (sample) ... 290
Table A-4 General Settings ... 299
Table A-5 General alarm settings ... 300
Table A-6 Pre-set alarm limits ... 300
Table A-7 Pre-set views ... 300
Table A-8 Dimensions ... 301
Table A-9 Weight ... 301
Table A-10 Environmental requirements ... 302
Table A-11 Energy management/power supply ... 303
Table A-12 Alarm management ... 303
Table A-13 Screen ... 304
Table A-14 Touchscreen ... 304
Table A-15 Printer ... 304
Table A-16 Character encoding ... 304
Table A-17 ECG ... 305
Table A-18 Leads ... 305
Table A-19 Heart rate ... 306
Table A-20 Shock paddle ECG ... 307
Table A-21 Output ... 307
Table A-22 Conductive area ... 307
Table A-23 Defibrillation ... 308
Table A-24 Biphasic defibrillator ... 309

Table A-25 Non-invasive pacer ... 309
Table A-26 CPR Feedback ... 310
Table A-27 Storage requirements on the CF card ... 310
Table A-28 Bluetooth interface (option) ... 310
Table A-29 2G GSM/GPRS (option) ... 310
Table A-30 3G GSM/GPRS/EDGE/UMTS/HSPA+ (option) ... 310
Table A-31 4G LTE (Option) ... 311
Table A-32 LAN interface (option) ... 311
Table A-33 WLAN interface (option) ... 311
Table A-34 Country codes for W-LAN regional settings ... 312
Table A-35 Oximeter (Option SpO_2, SpCO, SpHb, SpMet, manufacturer Masimo®, Masimo SET® technology) ... 313
Table A-36 Non-invasive blood pressure measurement module (Option NIBP, manufacturer SunTech Medical, Inc.) ... 314
Table A-37 Invasive blood pressure measurement module IBP (Option) ... 315
Table A-38 Temperature (option) ... 315
Table A-39 Capnometer (Option CO_2, manufacturer Nihon Kohden, cap-ONE) ... 317
Table A-40 Height compensation, quantitative effect due to barometric pressure on the CO2 value ... 317
Table A-41 Deviations due to negative effects of gases and steam ... 317
Table A-42 Disposable Adapter for CO_2 Endotracheal Tube incl. Insert for Neonates ... 318
Table A-43 Precision of the energy released (6/4 defibrillation impulse) ... 322
Table A-44 Precision of the energy released (4/3 defibrillation impulse) ... 323
Table A-45 Precision of the energy released for shock spoons (6/4 defibrillation impulse) ... 324
Table A-46 Precision of the energy released for shock spoons (4/3 defibrillation impulse) ... 324
Table A-47 Safety information ... 329
Table A-48 Duration of the maximum ECG analysis ... 330
Table A-49 Acceleration of the ECG analysis process ... 330
Table A-50 Classification table ... 331
Table A-51 Results ... 332
Table A-52 Electromagnetic emission ... 334
Table A-53 Electromagnetic interference immunity part 1 ... 335
Table A-54 Electromagnetic interference immunity part 2 ... 337
Table A-55 Recommended protection distances ... 338

Index

4

4/3 Defibrillation impulse 22, 72, 78, 320

6

6/4 Defibrillation impulse 22, 72, 78, 320

A

Accessories 242
Accessory bag 17
  Fitting 59
  Packing 60
Accessory Bag
  Cleaning 242
ACS
  ECG measurement/interpretation 289
Ad-hoc connection
  see connection authorisation 12
AED mode
  Compression synchronised therapy 106
  Information 71
  malfunctions 258
  with corPatch electrodes 75
AED Mode
  with Shock Paddles 76
Alarm limits
  automatic setting 174
  manual setting 173
Alarm management, technical specifications 303
Alarm suspension 31
AMI
  see ECG measurement/interpretation 289
APN
  Configuration 289
Auto Curve
  CO2 169
  ECG 166
  IBP 170
  Oximetry 168
Auto Energy 179

B

Baby shock electrodes 85
  Cleaning 240
  Connecting 85
  Disinfection 240
  Sterilisation 240
Backpack carrying strap
  Cleaning 242
Basic structure of the screen pages 43
Batteries
  Charging 34
  Maintenance 34
  Remaining running time display 33
Battery operation 33
Beta software
  Beta version 48, 256
Biphasic defibrillator 319
  technical specifications 308
Blood pressure monitoring, invasive (IBP)
  information 149
  Performing 150
  preparation 149
Blood pressure monitoring, non-invasive (NIBP)
  information 142
  malfunctions 262
  Performing individual measurement 147
  Performing interval monitoring 148
  preparation 145
Bluetooth
  Connections
    Deleting 208
  Data protection PIN 219, 220
Bluetooth data interface
  Configuration 219
Bluetooth interface
  Technical specifications 310
Bracket
  Compact device 63
  Monitoring unit 63
  Patient box 64

Brackets 19

C

Cable for monitoring functions
Cleaning 241
Disinfection 241
Capnometer, technical specifications 316
Carrying strap
Cleaning 242
Changing the scale
CO2 monitoring 141
Changing the unit of CO2 monitoring 141
Character encoding
Technical specifications 304
Charging brackets
Cleaning 242
Charging tone
see Defibrillation 72, 75, 76, 81, 82, 84, 180, 181
Check
Accessories 231
Complete device 227
Consumables 231
Power supply 229
Checklist
Functional Check 290
Checks 226
Cleaning 237, 242
Cable for monitoring functions 241
CO2 sensor 241
Defibrillator 238
Disinfection 240
IBP transducer cable 242
Monitoring unit 238
NIBP Cuffs 241
Oximetry sensor 241
Patient box 238
Shock paddles 239, 240
Therapy master cable 240
CO2 monitoring
Changing the scale 141
changing the unit 141
information 136
Insert for neonates 139
malfunctions 262
Monitoring respiration rate 141
Performing 139
preparation 137
CO2 Monitoring
Monitoring CO2 value 139
CO2 sensor
Cleaning 241
Compact device 9
Brackets – insertion/removal 63
CompactFlash® card 195
Compression synchronised therapy
AED mode 106
Compression Synchronised Therapy
Manual Mode 106
Configuration 154
Export 177
Import 177
Telemetry services 209
Configuration dialogue 54
Connection authorisation
Ad-hoc connection 12
Pairing 12
Consumables
Defibrillator 242
Control
Menu 51
Conventions xiv
corPatch electrodes
AED mode 75
Manual defibrillation 81
corpuls cpr
Therapy control via corpuls3 105
Therapy parameters 105
corpuls.mission LIVE
Configuration 210
Country codes
WLAN interface 311
CPR Feedback
Technical specifications 309
Using 98, 101
Creating a Patient File 202
Curve context menu 52
cWEB
see Telemetry 289

D

Data
Analysis 201

Processing 201
Data archiving 196
Data management
Insurance card reader 202
Data Management 195
Data transmission
see Telemetry 215
D-ECG
Additional printout 201
D-ECG browser 201
Defibrillation 321
Charging tone 72, 75, 76, 81, 82, 84, 180, 181
Deliver shock 228, 330
Ready for shock 81, 82, 84, 307, 308, 330
Ready-signal 75, 76, 81, 82, 84, 270
Defibrillation automatic (AED)
see AED mode 71
Defibrillation impulse
4/3 ..... 22, 72, 78, 320
6/4 ..... 22, 72, 78, 320
Defibrillation, manual
malfunctions 258
with corPatch easy electrodes 81
with shock paddles 82
with shock spoons 83
Defibrillation, manual see Manual mode 78
Defibrillator
Accessories 242
Cleaning 238
Components 9
Consumables 242
Spare parts 242
Switching off 49
Switching on 48
technical specifications 307
Defibrillator, biphasic 319
technical specifications 308
Defibrillator/pacer 18
Defibrillator/Pacer
Control key 47
LEDs 47
Defibrillator/Pacer SLIM 19
Control key 47
LEDs 47
Deliver shock
see Defibrillation 228, 330
Diagnostic ECG
preparation 116
Recording 118
Diagnostic functions 20
Dimensions 301
Disconnection signal 180
Disinfection 237
Cable for monitoring functions 241
IBP transducer cable 242
Oximetry sensor 241
Shock paddles 240
Temperature sensor 242
Disposal 341
Packaging 341
Dynamic QRS/pulse tone
see QRS-/pulse tone, dynamic 168

E

ECG
ECG cable tester 109, 111, 115, 118
ECG filter settings 114
Filter settings 182
Longterm ECG 128
Monitoring 108
Technical specifications 305
with therapy electrodes 306
ECG analysis 330
ECG cable tester 109, 111, 115, 118
ECG filter settings 114
ECG measurement/interpretation
ACS 289
AMI 289
codes 125
HES 289
IMI 289
NSTEMI 289
PCI 289
STEMI 289
ECG monitoring
adaptation of the ECG curve 112
information 107, 108
malfunctions 259
preparation 110
Electrodes
Connecting the cable 68
Defibrillation electrodes 66

Electromagnetic emission 334
End of paper roll 163, 229, 254
Energy management
Lithium-ion battery 33, 302
malfunctions 267
technical specifications 302
Energy selection 22
Energy selection, automatic
see Auto Energy 179
Environmental requirements 301
Event key 196
Export
Configuration 177
External pacer
technical specifications 309

F

Fax Server
Configuration 210, 212
Filter setting 114, 182
Folding 112, 199
Function check
Power supply 226
Function Check
Accessories 226
Device 226

G

General terms and conditions 339
GPRS
APN 206
Configuration 206
Password 206
User name 206
GSM
Configuration 206
PIN 206
GSM 2G
technical specifications 310
GSM 3G
technical specifications 310

H

Heart rate monitoring 114
HES
ECG measurement/interpretation 289

I

IBP transducer cable
Cleaning 242
Disinfection 242
Sterilisation 242
IMI
see ECG measurement/interpretation 289
Import
Configuration 177
Information labels 1
Insurance card reader 202
Interfaces
Patient box 16
Invasive blood pressure monitoring (IBP) 21
malfunctions 266
Inverted video display 42

L

LAN interface
technical specifications 311
Lithium-ion battery 33, 302
Live data transmission
see Telemetry 215
Loading the printer paper 235
Longterm ECG 128
Performing 129
preparing 128
Longterm ECG browser 128
LTE 4G
Technical specifications 311
LT-ECG browser 201

M

MagCode connectors
Cleaning 242
Main Menu 53
Mains operation 34
Maintenance 234
General 225
Schedule 225
Malfunctions 243
Manual Mode
Compression Synchronised Therapy 106
Manufacturer 367
Marking paper roll 163, 229, 235
Master data

configuration ... 185
Menu types ... 51
Configuration dialogue ... 54
Curve context menu ... 52
Main menu ... 53
Parameter context menu ... 52
Softkey context menu ... 51
Menu, control ... 51
Metronome
Settings ... 94
Starting ... 95
Millivolt mark ... 112, 113, 199
Minute mean values ... 162, 198
Mission upload
Configuration ... 211
Modules ... 9
Connection ... 54
Disconnection ... 54
Infrared connection ... 10
Radio connection ... 10, 32, 41
Monitoring
blood pressure ... 142, 149
CO2 ... 136
ECG ... 107, 108
Oximetry ... 130
temperature ... 152
Monitoring CO2 value ... 139
Monitoring functions ... 20
Alarms ... 325, 329
Monitoring pulse rate and perfusion index, Oximetry monitoring ... 135
Monitoring respiration rate (Pleth)
Oximetry monitoring ... 135
Monitoring respiratory rate ... 141
Monitoring unit ... 14
Alarm configuration ... 32
Basic structure of the screen pages ... 40
Bracket – insertion/removal ... 63
Cleaning ... 238
Connection to defibrillator/pacer ... 57
LEDs ... 37
Operating elements ... 37
Power supply ... 35
Touchscreen ... 37, 43
mV-mark ... 112, 113, 199

N

Neonate insert
Technical specifications ... 318
Network
Connection ... 45
Troubleshooting ... 258
NIBP Cuffs
Cleaning ... 241
Disinfection ... 241
NIBP Views ... 142
NIBP, Technical specifications ... 314
Non-invasive blood pressure monitoring (NIBP) ... 21
NSTEMI
ECG measurement/interpretation ... 289

O

Operating
Disconnection and connection of modules ... 54
Operating- and screen elements ... 37
Operating instructions ... 37
Operation
Automatic defibrillation ... 71
General ... 37
Manual defibrillation ... 78
monitoring and diagnostic functions ... 107
Therapy ... 66
Touchscreen ... 37, 43
Oximetry monitoring ... 130
adjusting display ... 134
Averaging time ... 134
Extended ... 131
FastSat® ... 134
malfunctions ... 260
Monitoring respiration rate (Pleth) ... 135
Performing ... 133
preparation ... 132
Sensitivity ... 134
Oximetry Monitoring
Information ... 130
Oximetry -Monitoring
monitoring pulse rate and perfusion index ... 135
Oximetry sensor
Cleaning ... 241
Disinfection ... 241
Oximetry, technical specifications ... 312

P

Pacer
malfunctions ... 259
Pacer therapy ... 87
Pacer, external
Preparing pacer function ... 88
Starting pacer function ... 90
technical specifications ... 309
Pacing ... 23
Pairing
see connection authorisation ... 12
Parameter context menu ... 52
Patents ... 340
Patient box ... 15
Alarm signals ... 32
Bracket – insertion/removal ... 64
Cleaning ... 238
Control keys ... 46
Interfaces ... 16
LEDs ... 46
Power supply ... 35
Removal from the compact device ... 58
Screen ... 45
Patient box screen ... 45
Patient data, entry ... 195
PCI
see ECG measurement/interpretation ... 289
Power supply ... 35
Printer ... 235
malfunctions ... 266
technical specifications ... 304
Printer paper
Information ... 329
Printer paper empty ... 163, 229, 235
Pulse tone
see QRS-/Pulse tone ... 296
Pulse tone, dynamic ... 168
see QRS-/Pulse tone ... 166

Q

QRS
QRS Marker ... 166, 295
QRS-/Pulse tone ... 166, 295
QRS-/Pulse tone
QRS-/Pulse tone, dynamic ... 166, 168
Qualified staff ... 7

R

Radio connection
see Modules ... 258
Ready for shock
see Defibrillation ... 81, 82, 84, 307, 308, 330
Ready-signal
see Defibrillation ... 75, 76, 81, 82, 84, 270
Real-time printout ... 112, 161, 304
Recycling ... 341
Refractory time ... 330
Regular checks ... 225
Remaining running time display, batteries ... 33
Representative Cycle ... 125
Reset
Reset configuration ... 176, 177
Reset default ... 176, 177
Reset to factory settings ... 291

S

Safety
General ... 1
Operating staff ... 7
Safety information ... 325
Screen
Night ... 43
see Inverted video display ... 42
Technical specifications ... 303
Screenshot ... 202
Self-test ... 234
Service address ... iii
Settings
alarms ... 154
monitoring functions ... 154
system settings ... 154
Shock paddles
AED Mode ... 76
Cleaning ... 239
Disinfection ... 239
Manual defibrillation ... 82
Removing from holders ... 69
Sterilisation ... 239
Shock Protocol ... 179
Shock spoons
manual defibrillation ... 83
SIM card ... 206
Softkey Context Menu ... 51

Spare parts 242
SSCP 26
STEMI
ECG measurement/interpretation 289
Sterilisation 237
IBP transducer cable 242
Temperature sensor 242
Switching off 49
Switching on 48
Symbols 1, 282
Synchronised therapy
Troubleshooting 268

T

TCP
Configuration 289
Technical specifications
4G LTE 311
Alarm management 303
battery 302
Bluetooth interface 310
capnometer 316
Character encoding 304
CPR Feedback 309
defibrillator 307
ECG 305
energy management 302
GSM 2G 310
GSM 3G 310
LAN interface 311
Neonate insert 318
NIBP 314
oximetry 312
power supply 302
Touchscreen 304
WLAN interface 311
Technical Specifications
ECG with therapy electrodes 306
printer 304
Screen 303
Telemetry 204
APN 289
Connections 207
Deleting 208
Data transmission 215
Entering e-mail address 208
Entering internet address 208
Entering IP address 208
Entering phone number 208
Live data transmission 215
Networks 213
Settings 215
TCP 289
UDP 209
Telemetry services
Configuration 209
Temperature 21
Temperature monitoring
information 152
malfunctions 265
Performing 153
preparation 152
Temperature sensor
Cleaning 242
Disinfection 242
Sterilisation 242
Test software
Test version 48
Tests
General 225
Therapy control
corpuls cpr 105
Therapy electrodes 66
Therapy functions 21
Therapy master cable
Cleaning 240
Disinfection 240
Therapy parameters
corpuls cpr 105
Touchscreen 37, 43
Technical specifications 304
Trademarks 340
Trend 164
Trend curve 162
Trend table 162
Trouble shooting and remedying malfunctions
during oximetry monitoring 260
Troubleshooting
Network 258
Synchronised therapy 268
Troubleshooting and remedying malfunctions
Defibrillation 258

during CO2 monitoring 262
during IBP monitoring 266
during pacing 259
during temperature monitoring 265
General 257, 258
printer 266
Troubleshooting and remedying malfunctions during ECG monitoring 259
Troubleshooting and remedying malfunctions in energy management 267

U

UDP
Configuration 209
User and operational safety 339

V

Ventricular fibrillation 172
Ventricular tachycardia 172
Views 291, 300
Visual and Function Check 225
VT/VF alarm 172

W

Warning labels 1
Warranty 339
Warranty conditions 339
Weight 301
WLAN interface
Country codes 311
Technical specifications 311



corpuls

GS Elektromedizinische Geräte G. Stemple GmbH
Hauswiesenstrasse 26
86916 Kaufering
Germany
Tel.: +49 8191 65722-0
Fax: +49 8191 65722-22
Website: https://corpuls.world